SKOOT·HT

DP0029 Rev 02.4

Automated Scanner

JIREH

KEEP THIS MANUAL – DO NOT LOSE

THIS MANUAL IS PART OF THE **SKOOT HT** SYSTEM AND MUST BE RETAINED FOR THE LIFE OF THE PRODUCT. PASS ON TO SUBSEQUENT OWNERS.

Ensure any amendments are incorporated with this document.

WARNING! The **SKOOT HT** is designed for a specific use. Using the **SKOOT HT** outside of its intended use is dangerous. Failure to comply with the warnings, instructions, and specifications in this manual could result in **SEVERE INJURY** or **DEATH**. Read and understand this manual before using.

WARNING! FALLING OBJECT HAZARD. The area below a crawler must be kept clear at all times. A clearly marked **NO ENTRY ZONE** must be cordoned off directly below the area of crawler operation.

(see No Entry Fall Zone on page 31 for additional details)

WARNING! Do **NOT** operate or place crawler on a surface higher than 2 m *(6 ft)* without a proper tether held taut at all times.

(see Tether Requirements and Attachment on page 32 for additional details)

WARNING! ELECTRICAL CORDS CAN BE HAZARDOUS. Misuse can result in **FIRE** or **DEATH** by **ELECTRICAL SHOCK**. Inspect thoroughly before each use. Do **NOT** use if damaged. Do **NOT** use when wet. Keep away from water. Do **NOT** drive, drag or place objects over cord.

WARNING! Do **NOT** operate scanner in an explosive environment. Do **NOT** operate scanner in the presence of volatile substances.

WARNING! MAGNETIC MATERIAL. The wheels of the crawler produce an extremely strong magnetic field which may cause failure or permanent damage to items such as watches, memory devices, CRT monitors, medical devices or other electronics.

Tools, magnets and metal objects can cut, pinch or entrap hands and fingers. **HANDLE WITH CARE**.

People with pacemakers or ICD's must stay at least 25 cm *(10 in)* away.

WARNING! MAGNETIC MATERIAL. The handheld controller produces a strong magnetic field which may cause failure or permanent damage to items such as watches, memory devices, CRT monitors, medical devices or other electronics.

People with pacemakers or ICD's must stay at least 10 cm *(4 in)* away.

WARNING! MAGNETIC MATERIAL. The handheld controller produces a strong magnetic field which may cause failure or permanent damage to items such as watches, memory devices, CRT monitors, medical devices or other electronics.

People with pacemakers or ICD's must stay at least 10 cm *(4 in)* away.

WARNING! HOT SURFACE. The **SKOOT HT** crawler may reach temperatures that may cause burns if contacted with bare skin. Wear heat resistant safety gloves when handling.

WARNING! The coolant used in this product contains a 50/50 blend of ethylene glycol based automotive antifreeze and water. Consult the MSDS for hazards associated with the use and handling of this coolant.

WARNING! FLAMMABLE. The coolant used in this product contains a 50/50 blend of ethylene glycol based automotive antifreeze and water which, in very specific conditions, may be flammable. If a leak develops, remove the **SKOOT HT** from the hot surface immediately. Keep ignition sources away from coolant vapors. Do not use system on surfaces >350°C *(662°F)*.

WARNING! LASER RADIATION. The battery powered optical guide contains a Class 1M laser. Do not view directly with optical instruments.

WARNING! If this product is to be used with any Child Products listed in *(Chapter 2.3)*, be sure to read and comply with the warnings, instructions, and specifications in the Child Product's User Manual*(s)*.

WARNING! DO NOT DISASSEMBLE. No user-serviceable parts. Disassembling any of the components in this product, beyond the instructions in this user manual, could void the regulatory certifications and/or effect the safety of the product.

CAUTION! DO NOT operate the **SKOOT HT** crawler on an inspection surface which is electrically connected to a component that is being welded.

CAUTION! DO NOT DISCONNECT UNDER LOAD. Shut off power before connection or disconnecting. Permanent damage to electronics could occur.

EMERGENCY STOP. This symbol indicates emergency stop button.

The WEEE symbol indicates that the product must not be disposed of as unsorted municipal waste, but should be collected separately.

(see Disposal on page 138 for additional details).

TABLE OF CONTENTS

1 Identification 1
- 1.1. Product Brand 1
- 1.2. Manufacturer 1
- 1.3. Compliance Declarations 1
  - 1.3.1. ISED Emissions Compliance (Canada) 1
  - 1.3.2. FCC Suppliers Declaration of Conformity (United States) 1
  - 1.3.3. European Union CE Declarations 2
  - 1.3.4. UKCA Declarations 2

2 Product Specifications 3
- 2.1. Base SKOOT HT System 3
  - 2.1.1. Intended Use 3
    - 2.1.1.1 Operating Limits 4
    - 2.1.1.2 Operating Environment 5
    - 2.1.1.3 User 5
  - 2.1.2. Unintended Use 6
  - 2.1.3. Dimensions and Weight 7
  - 2.1.4. Power Requirements 8
  - 2.1.5. Environmental Sealing 8
  - 2.1.6. Performance Specifications 9
  - 2.1.7. Encoder Interface Specifications 9
- 2.2. Compatible Components 10
  - 2.2.1. Low Profile Probe Holder Frame 10
    - 2.2.1.1 Intended Use 10
    - 2.2.1.2 Operating Limits 10
  - 2.2.2. Vertical Probe Holder Frame 10
    - 2.2.2.1 Intended Use 10
    - 2.2.2.2 Operating Limits 10
  - 2.2.3. Pivoting Probe Holder Frame 11
    - 2.2.3.1 Intended Use 11
    - 2.2.3.2 Operating Limits 11
  - 2.2.4. Frame Bar 11
    - 2.2.4.1 Intended Use 11
    - 2.2.4.2 Operating Limits 11
  - 2.2.5. Slip Joint Probe Holder 12
  - 2.2.6. Vertical Probe Holder 12
  - 2.2.7. Heavy Duty Vertical Probe Holder 12
  - 2.2.8. Corrosion Thickness Probe Holder HT 12

2.2.9. SKOOT HT Extension Kit 12
2.2.10. Battery Powered Optical Guide 13
2.2.10.1 Intended Use 13
2.2.10.2 Operating Environment 13
2.2.10.3 Power Requirements 13
2.2.10.4 Environmental Sealing 13
2.2.11. Encoder Adapter 13
2.3. Child Products 14
2.3.1. Motorized Couplant Pump 14
2.3.2. Motorized Raster Arm HT 14
2.3.3. Battery Kit 14

3 Definitions 15
3.1. Definitions of Symbols 15
3.2. Safety Symbols 15
3.3. Safety Signal Words 16

4 System Components 17
4.1. Component Identification 17
4.1.1. Base System 17
4.1.2. Compatible Components 19
4.1.3. Child Products 20
4.2. Tools 21
4.2.1. Included Tools 21
4.2.2. Optional Tools 21
4.3. Base System Components 22
4.3.1. Crawler 22
4.3.1.1 Emergency Off Button 22
4.3.2. Power Controller 23
4.3.2.1 AC/DC Power Supply 24
4.3.3. SKOOT HT Umbilical 25
4.3.4. Handheld Controller 25
4.3.5. Manipulation Handle 25
4.3.6. Auxiliary Cables 26
4.3.7. J300 Encoder Cable 26
4.3.8. Irrigation Kit 26
4.3.9. HT Cable Management 26
4.3.10. Cooler 27
4.3.11. Hoses 27
4.3.12. Tools 27
4.3.13. Cases 27

4.4. Compatible Components 28
4.4.1. Low Profile Probe Holder Frame 28
4.4.2. Vertical Probe Holder Frame 28
4.4.3. Pivoting Probe Holder Frame 28
4.4.4. Frame Bar 28
4.4.5. Slip Joint Probe Holder 28
4.4.6. Vertical Probe Holder 29
4.4.7. Heavy Duty Vertical Probe Holder 29
4.4.8. Corrosion Thickness Probe Holder HT 29
4.4.9. SKOOT HT Extension Kit 29
4.4.10. Battery Powered Optical Guide 29
4.4.11. Encoder Adapter 30
4.5. Child Products 30
4.5.1. Motorized Couplant Pump 30
4.5.2. Motorized Raster Arm HT 30
4.5.3. Battery Kit 30

5 Preparation for Use 31
5.1. Transportation 31
5.2. Preparation for Safe Use 31
5.2.1. No Entry Fall Zone 31
5.2.2. Tether Requirements and Attachment 32
5.3. Preparation of Inspection Surface 33
5.4. System Connectivity 34
5.5. Configurations 36
5.5.1. Crawler with Multiple Probe Holders 36
5.5.1.1 Low Profile Probe Holder Frame 36
5.5.1.2 Vertical Probe Holder Frame 38
5.5.1.3 Pivoting Probe Holder Frame 40
5.5.1.4 Flange 42
5.6. Crawler 44
5.6.1. Swivel Mount 44
5.6.2. Umbilical 45
5.6.3. Handle 46
5.6.4. Emergency Off Button 47
5.6.5. Cable Retainer 48
5.6.6. Manipulation Handle 48
5.6.7. Quick Connect Fitting 49
5.7. Handheld Controller 49
5.7.1. Magnetic Mounts 49
5.8. Probe Holder 50

5.8.1. Heavy Duty Vertical Probe Holder 50
5.8.1.1 Probe Holder Setup 50
5.8.1.2 Probe Holder Vertical Adjustment 52
5.8.1.3 Probe Holder Left/Right Conversion 53
5.8.1.4 Probe Holder 90° Adjustment 54
5.8.2. Vertical Probe Holder 55
5.8.2.1 Probe Holder Setup 55
5.8.2.2 Probe Holder Vertical Adjustment 56
5.8.2.3 Probe Holder Transverse Adjustment 57
5.8.2.4 Probe Holder Longitudinal Adjustment 58
5.8.2.5 Probe Holder Left/Right Conversion 59
5.8.3. Slip Joint Probe Holder 61
5.8.3.1 Probe Holder Setup 61
5.8.3.2 Probe Holder Adjustment 63
5.8.3.3 Probe Holder Force Adjustment 63
5.8.3.4 Slip Joint Probe Holder Left/Right Conversion 65
5.9. Probe Holder Frames 67
5.9.1. Low Profile Probe Holder Frame - Flat or Circumferential Only 67
5.9.2. Vertical Probe Holder Frame - Flat or Circumferential Only 71
5.9.3. Pivoting Probe Holder Frame 75
5.9.3.1 Mounting a Pivoting Probe Holder Frame 76
5.9.4. Pivoting Probe Holder Frame Setup - Longitudinal Scanning 77
5.9.4.1 Longitudinal Scanning 77
5.9.4.2 Circumferential Scanning 78
5.9.4.3 Pivoting Probe Holder Frame - Flange Scanning 79
5.9.5. Battery Powered Optical Guide Pivot Mount 82
5.10. HT Cable and Hose Management 83
5.10.1. Mounting the HT Cable Management 83
5.10.2. Cable Management Setup 84
5.10.3. Clamp Setup 85
5.10.4. Hose Connection and Routing 85
5.10.5. Disconnecting Hoses 86
5.11. Accessories 87
5.11.1. Battery Powered Optical Guide 87

6 Operation 88
6.1. System Startup 88
6.2. Placement of Crawler on Inspection Surface 90
6.3. Removal of Crawler from Inspection Surface 93
6.4. Operation 95
6.4.1. Handheld Controller Layout 95
6.4.1.1 Touchscreen 96

6.4.1.2 D-pad 96
6.4.1.3 Joysticks 96
6.4.2. Mode Select Screen 97
6.4.3. Jog Mode 97
6.4.4. Latched Jog Mode 99
6.4.5. 1 Axis Scan Mode 100
6.4.5.1 1 Axis Scan Screen 101
6.4.6. Cooler Mode 103
6.4.7. Cooler Warnings 105
6.4.8. System Utilities Screen 106
6.4.8.1 User Settings Screen 106
6.4.8.2 Diagnostics Screens 107
6.4.8.2.1 Detected Modules 108
6.4.8.2.2 System 1 108
6.4.8.2.3 System 2 109
6.4.8.2.4 System 3 109
6.4.8.2.5 Skoot-L 110
6.4.8.3 Touch Calibration Screen 111
6.4.8.4 Joystick Calibration Screen 111
6.4.8.5 Draw 112
6.4.9. High Internal Temperature Screen 113

7 Maintenance 114
7.1. Safety Precautions Before Maintenance 114
7.2. Cleaning 114
7.3. Maintenance Schedule 115

8 Troubleshooting 116
8.1. Startup Issues 116
8.1.1. Joystick Off Center 116
8.1.2. Checking Network 117
8.2. Startup Override 117
8.2.1. Scan Devices 118
8.2.2. Reset Parameters 119
8.2.3. System Parameters 119
8.2.4. Device Address 119
8.3. Additional Issues 120
8.4. Retrieval of a Stranded Crawler 121

9 Service and Repair 122
9.1. Technical Support 122

10 Spare Parts 123
10.1. SKOOT HT Crawler 123
10.2. SKOOT HT Kit Components 124
10.2.1. Encoder Connector Type 126
10.2.2. Power Cord Type 126
10.3. Hose Spare Parts 127
10.4. Probe Holder Frame 128
10.5. Low Profile Probe Holder Frame 129
10.6. Pivoting Probe Holder Frame 130
10.7. Slip Joint Probe Holder Parts 131
10.8. Vertical Probe Holder Parts 132
10.9. Heavy Duty Vertical Probe Holder 133
10.10. Corrosion Thickness Probe Holder HT 134
10.11. Probe Holder Components 135
10.11.1. Arm Style 135
10.11.2. Yoke Style 135
10.11.3. Swing Arm Style 135
10.11.4. Heavy Duty Yoke Style 135
10.11.5. Pivot Button Style 135
10.12. Variable Components 136
10.12.1. Frame Bar 136
10.12.2. HT Cable Management Sleeving 136
10.13. Cases 137

11 Disposal 138

12 Limited Warranty 139

IDENTIFICATION

1.1. Product Brand

The SKOOT • HT is a remotely operated vehicle with magnetic wheels suitable for driving on ferrous material. Its primary purpose is to move inspection equipment over areas of structures, such as tanks or pipes, made from ferrous materials in industrial environments.

1.2. Manufacturer

Distributor:

Manufacturer:

Jireh Industries Ltd.

53158 Range Road 224
Ardrossan, Alberta T8E 2K4
Canada

Phone: 780.922.4534

jireh.com

1.3. Compliance Declarations

1.3.1. ISED Emissions Compliance (Canada)

CAN ICES-003(A) / NMB-003(A)

This Class A digital apparatus complies with Canadian ICES-003.

Cet appareil numérique de la classe A est conforme à la norme NMB-003 du Canada.

1.3.2. FCC Suppliers Declaration of Conformity (United States)

This device complies with Part 15 of the FCC Rules. Operation is subject to the following two conditions: *(1)* this device may not cause harmful interference, and *(2)* this device must accept any interference received, including interference that may cause undesired operation.

This equipment has been tested and found to comply with the limits for a Class A digital device, pursuant to part 15 of the FCC Rules. These limits are designed to provide reasonable protection against harmful interference when the equipment is operated in a commercial environment. This equipment generates, uses, and can radiate radio frequency energy and, if not installed and used in accordance with the instruction manual, may cause harmful interference to radio communications. Operation of this equipment in a residential area is likely to cause harmful interference in which case the user will be required to correct the interference at his own expense.

RESPONSIBLE PARTY NAME:	Jireh Industries
ADDRESS:	2955 S Sam Houston Pkwy E Suite 300 Houston, Texas United States 77047
TELEPHONE:	832-564-0626

1.3.3. European Union CE Declarations

Jireh Industries hereby declares that the SKOOT HT product complies with the essential requirements and other relevant provisions of the following European Union directives:

2014/30/EU	EMC Directive
2014/35/EU	Low Voltage Directive
2012/19/EU	Directive on Waste Electrical and Electronic Equipment
2011/65/EU	Directive on Restriction of Hazardous Substances (RoHS)

1.3.4. UKCA Declarations

Jireh Industries hereby declares that the SKOOT HT product complies with the essential requirements and other relevant provisions of the following UK directives.

Title	Edition/Date of Issue
Electromagnetic Compatibility Regulations	2016
Electrical Equipment (Safety) Regulations	2016
Waste Electrical and Electronic Equipment Regulations	2013
Restriction of the Use of Certain Hazardous Substances in Electrical and Electronic Equipment Regulations	2012

PRODUCT SPECIFICATIONS

2.1. Base SKOOT HT System

This section outlines the product specifications of the base system. When the base system is used together with compatible components *(Chaper 2.2)* or child products *(Chaper 2.3)*, the product specifications of the base system may be superseded. See *(see "Compatible Components" on page 10)* and *(see "Child Products" on page 14)*.

2.1.1. Intended Use

WARNING! FALLING OBJECT HAZARD.
The **SKOOT HT** is intended for a specific use. Read and understand the intended and unintended use limits below. Using the **SKOOT HT** outside of its intended use is dangerous and could result in **SEVERE INJURY** or **DEATH**.

The SKOOT HT's primary purpose is to perform inspections of ferrous assets such as pipes, vessels, or storage tanks by moving an inspection tool over a ferrous surface. It is intended for industrial use only.

2.1.1.1 Operating Limits

Category	Parameter	Specification
Inspection Surface	Maximum coating thickness:	
	Up-side-down orientation	Bare metal only
	Vertical orientation	0.5 mm *(0.020 in)*
	Horizontal, Right-side-up orientation	1 mm *(0.040 in)*
	Condition	Clean, free of excess rust, scale, debris *(i.e. dirt, sand, etc.)*, ice, frost
	Minimum thickness	3 mm *(0.120 in)*
	Minimum ID, internal circumferential driving	686 mm *(27 in)*
	Minimum ID, internal longitudinal driving	Flat *(Internal longitudinal driving not recommended)*
	Minimum OD, external circumferential driving	102 mm *(4 in)*
	Minimum OD, external longitudinal driving	762 mm *(30 in)*
	Maximum surface temperature	350°C *(662°F)*
Scanner	Maximum umbilical length	30 m *(100 ft)*
	Maximum payload *(performance may vary with surface condition)*	9 kg *(20 lb)* *(Umbilical and attachments are considered payload)*
	Attachments	Restricted to those listed in compatible components or child products
	Orientation while driving at height >2 m *(6 ft)* on vertical surface	Umbilical strain relief to point downwards, or at worst, horizontal. It is not to point upwards
	Required radial clearance *(stick handle and backpack removed, front handle lowered, circumferential driving)*	102 mm *(4 in)* on outer diameters <200 mm *(8 in)* 112 mm *(4.4 in)* on outer diameters >200 mm *(8 in)*

2.1.1.2 Operating Environment

The SKOOT HT is for use in dry industrial environments having ambient temperatures shown below. It is NOT intended for use in explosive environments.

> *NOTE: The Cooler has sufficient cooling capacity to continuously cool the **SKOOT HT** with Raster Arm HT operating on a 350°C (662°F) surface, provided the Cooler is kept in an ambient temperature less than 35°C (95°F). Operation with a duty cycle or supplemental cooling may be required for ambient temperatures greater than 35°C (95°F).*

Category	Parameter	Specification
Environment	Minimum ambient temperature	-20°C *(-4°F)*
	Maximum ambient temperature	50°C *(122°F)*

2.1.1.3 User

The SKOOT HT is intended to be used by persons who have read and understand the user manual. The intended user is to be a person without limitations in the physical abilities of the upper and lower limbs, sight, hearing, or anyone with a pacemaker or Implantable Cardioverter Defibrillator (ICD).

For operating at a height greater than 2 m *(6 ft)*, the SKOOT HT is intended to be used by two people:

1. a person who is trained in rigging and fall protection and is able to effectively apply the same safety principles to the crawler, and
2. a person who is trained to operate the SKOOT HT

2.1.2. Unintended Use

The SKOOT HT is NOT intended for:

- use outside of its intended use
- unattended use
- lifting / lowering objects or people (i.e. using the SKOOT HT as a crane / elevator)
- driving into / over obstructions, excluding standard weld caps
- installation on a surface on which welding is actively occurring

In addition to the above points, for operating at a height greater than 2 m (6 ft), the crawler is NOT intended for:

- operation without a properly cordoned off no entry fall zone and/or proper tether system
- operating up-side-down
- operating while oriented such that the umbilical strain relief points upward *(front for the SKOOT HT is lower than the umbilical connection)*.

2.1.3. Dimensions and Weight

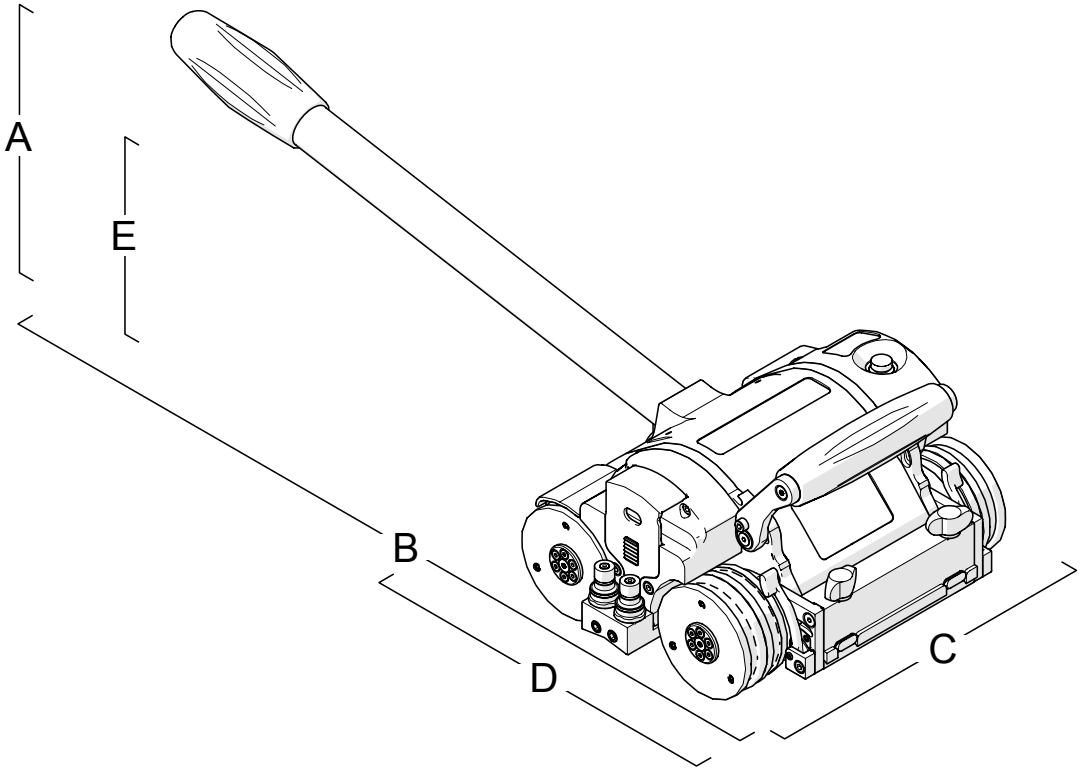

Fig. 1 - Dimensions

A:	16 cm	6.3 in
B:	55.5 cm	21.8 in
C:	22.9 cm	9 in
D: *(without manipulation handle)*	23.3 cm	9.1 in
E: *(without manipulation handle)*	11.2 cm	4.4 in
Crawler weight:	7.7 kg	16.9 lb

2.1.4. Power Requirements

WARNING! A reliable power source must be used to power the crawler. Connections must be secured to prevent accidental disconnection. Power failure may cause the crawler to freewheel down when operating in a vertical orientation. Portable generator usage is not recommended unless accompanied by the use of an uninterruptible power controller.

WARNING! Proper grounding of the power controller is important for safe operation. When a generator is used to supply power to the system *(not recommended)*, the generator must be properly grounded *(refer to generator manual)*.

CAUTION! DO NOT DISCONNECT UNDER LOAD. Shut off power before connection or disconnecting. Permanent damage to electronics could occur.

CAUTION! Power must be supplied from an approved Jireh power source.

Input Voltage:	25-45VDC
Input Power:	320W

2.1.5. Environmental Sealing

Dust-tight, watertight *(not submersible)*.

2.1.6. Performance Specifications

Category	Parameter	Specification
Crawler	Maximum speed	14.2 cm/sec *(5.6 in/sec)*
	Encoder resolution, drive motor	1354 counts/mm *(34394 counts/in)*

2.1.7. Encoder Interface Specifications

Output type: 4 channel quadrature 5VDC RS422 compatible.

Power: Power must be supplied to the interface.
5VDC +/-10% power limited to < 15w.

1	Enc B
2	Enc B’
3	Enc A
4	Enc A’
5	Aux Enc A’
6	Aux Enc A
7	Aux Enc B’
8	Aux Enc B
9	Enc +5V
10	Enc Com
H	Shield

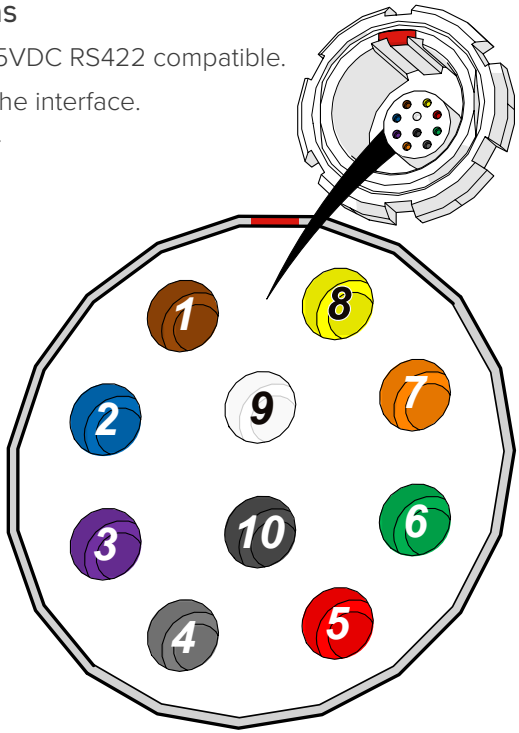

Fig. 2 - JIREH Industries pin out configuration

2.2. Compatible Components

The components listed in this section integrate with the base system to perform certain tasks. Their use may modify the product specifications *(i.e. intended use, power requirements, etc.)* from those of the base system. The specifications listed here supersede those of the base system. If no specifications are listed here, the specifications of the base system remain effective

2.2.1. Low Profile Probe Holder Frame
CXG004-

2.2.1.1 Intended Use

The Low Profile Probe Holder Frame is intended to be mounted in the SKOOT HT's swivel mount to provide mounting of multiple probe holders. Its use limits the SKOOT HT's operation to inspection surfaces that are either flat or driven on in the circumferential direction.

2.2.1.2 Operating Limits

Category	Parameter	Specification
Inspection Surface	Minimum OD, longitudinal driving	Not recommended
Maximum number of probe holders	Slip Joint Probe Holders	4

2.2.2. Vertical Probe Holder Frame
CXG007-

2.2.2.1 Intended Use

The Vertical Probe Holder Frame is intended to be mounted in the SKOOT HT's swivel mount to provide mounting of multiple probe holders. Its use limits the SKOOT HT's operation to inspection surfaces that are either flat or driven on in the circumferential direction.

2.2.2.2 Operating Limits

Category	Parameter	Specification
Inspection Surface	Minimum OD, longitudinal driving	Not recommended
Maximum number of probe holders	Vertical Probe Holders	6

2.2.3. Pivoting Probe Holder Frame CXG013-

2.2.3.1 Intended Use

The Pivoting Probe Holder Frame is intended to be mounted in the SKOOT HT's swivel mount to provide mounting of multiple probe holders. Its use limits the SKOOT HT's operation to the operating limits shown below.

2.2.3.2 Operating Limits

Category	Parameter	Specification
Maximum number of probe holders	Vertical Probe Holders	6

2.2.4. Frame Bar BG0038-

2.2.4.1 Intended Use

The Frame Bar is intended to be mounted in the SKOOT HT's swivel mount to provide mounting of multiple probe holders. Its use limits the SKOOT HT's operation to inspection surfaces that are either flat or driven on in the circumferential direction.

2.2.4.2 Operating Limits

Category	Parameter	Specification
Inspection Surface	Minimum OD, longitudinal driving	Not recommended
Maximum number of probe holders	Slip joint probe holders	2
	Vertical probe holders	2
	Heavy duty vertical probe holders	2

2.2.5. Slip Joint Probe Holder
PHA012-

The Slip Joint Probe Holder is intended to a provide probe holding solution for probes and wedges with pivot button holes. It is useful for situations requiring lower profile. It is mounted in the dovetail groove of any probe holder frame or frame bar.

2.2.6. Vertical Probe Holder
PHA015-

The Vertical Probe Holder is intended to a provide probe holding solution for probes and wedges with pivot button holes. It is mounted in the dovetail groove of any probe holder frame or frame bar.

2.2.7. Heavy Duty Vertical Probe Holder
PHS043-

The Heavy Duty Vertical Probe Holder is intended to a provide probe holding solution for larger, heavier probes. It is mounted in the dovetail groove of any probe holder frame or frame bar.

2.2.8. Corrosion Thickness Probe Holder HT
PHS078- / PHS082-

The Corrosion Thickness Probe Holder is intended to provide a probe holding solution for specific probes or wedges that do not have pivot button holes. It is mounted in the dovetail groove of any probe holder frame or frame bar.

2.2.9. SKOOT HT Extension Kit
DPG005-

The SKOOT HT Extension Kit provides the ability to extend the length of the umbilical, coolant lines, and protective sleeving.

2.2.10. Battery Powered Optical Guide CXS080

2.2.10.1 Intended Use

The Battery Powered Optical Guide is intended to provide a point of reference useful for guiding the SKOOT HT along a given path *(i.e. a weld cap)*. It is intended to be mounted in the dovetail groove of any probe holder frame or frame bar.

2.2.10.2 Operating Environment

Category	Parameter	Specification
Scanner	Required radial clearance	Dependent on mounted orientation of Battery Powered Optical Guide
Inspection surface	Maximum surface temperature	50°C *(122°F)*

2.2.10.3 Power Requirements

Power requirements: 1 AA Battery

2.2.10.4 Environmental Sealing

IP64

2.2.11. Encoder Adapter UMA010-

The Adapter Cable adapts a scanner's existing encoder cable connector to a different instrument's encoder input.

2.3. Child Products

The products listed in this section integrate with the base system to perform certain tasks. Their use may modify the product specifications *(i.e. intended use, power requirements, etc.)* from those of the base system. These products have a user manual of their own, and shall be referred to for their product specifications as well as how their use modifies the product specifications of the base system.

2.3.1. Motorized Couplant Pump
CMA015

The Motorized Couplant Pump is a powered pumping unit used to supply couplant fluid to scanning equipment.

2.3.2. Motorized Raster Arm HT
EDG001-

The Motorized Raster Arm HT is a high temperature component which can carry different types probes for various corrosion scans. The Motorized Raster Arm HT is intended to be mounted in the SKOOT HT's swivel mount.

2.3.3. Battery Kit
DVG001-

The battery provides portable power to the crawler.

DEFINITIONS

3.1. Definitions of Symbols

	Instructions to ‘look here’ or to ‘see this part’.
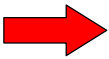	Denotes movement. Instructing user to carry out action in a specified direction.
	Indicates alignment axis.
	Alerts user that view has changed to a reverse angle.

3.2. Safety Symbols

The following safety symbols might appear on the product and in this document. Read and understand their meaning below:

	General warning symbol	This symbol is used to alert the user to potential hazards. All safety messages that follow this symbol shall be obeyed to avoid possible harm or material damage.
	Shock hazard caution symbol	This symbol is used to alert the user to potential electric shock hazards. All safety messages that follow this symbol shall be obeyed to avoid possible harm.
	Laser warning symbol	This symbol is used to alert the user to potential laser hazards. All safety messages that follow this symbol shall be obeyed to avoid possible harm or material damage.

3.3. Safety Signal Words

The following safety signal words might appear in this document. Read and understand their meaning below:

DANGER!	The DANGER signal word indicates an imminently hazardous situation. It calls attention to a procedure, practice, or the like that if not correctly performed or adhered to will result in death or serious personal injury. Do not proceed beyond a DANGER signal word until the indicated conditions are fully understood and met.
WARNING!	The WARNING signal word indicates a potentially hazardous situation. It calls attention to a procedure, practice, or the like that if not correctly performed or adhered to could result in death or serious personal injury. Do not proceed beyond a WARNING signal word until the indicated conditions are fully understood and met.
CAUTION!	The CAUTION signal word indicates a potentially hazardous situation. It calls attention to a procedure, practice, or the like that if not correctly performed or adhered to may result in minor or moderate personal injury, material damage, particularly to the product, destruction of part or all of the product, or loss of data. Do not proceed beyond a CAUTION signal word until the indicated conditions are fully understood and met.

4.1. Component Identification

4.1.1. Base System

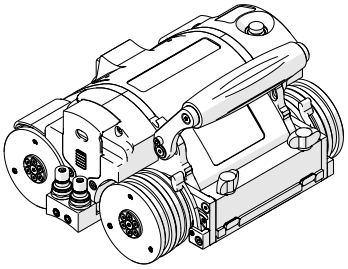

Fig. 3 - SKOOT HT (crawler)
DPA003

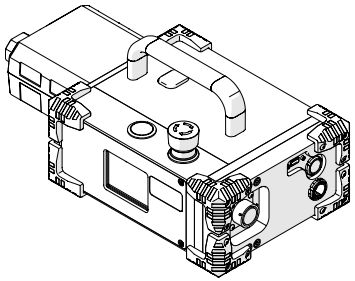

Fig. 4 - Power controller
CXA040-

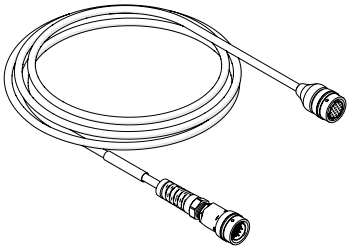

Fig. 5 - SKOOT HT umbilical
UMA043-

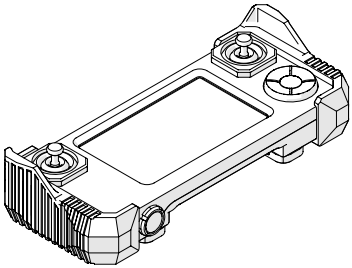

Fig. 6 - Handheld controller
DMA006

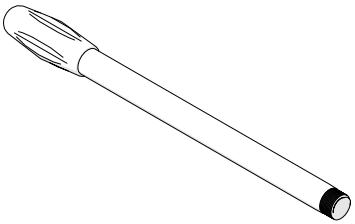

Fig. 7 - Manipulation handle
DNS006

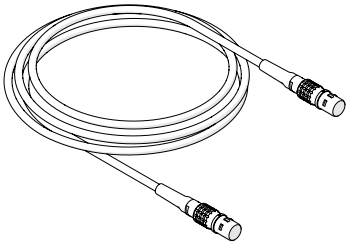

Fig. 8 - Auxiliary cable
UMA017-06

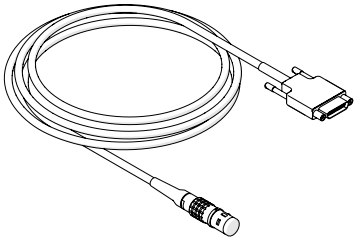

Fig. 9 - Encoder cable
UMA025-

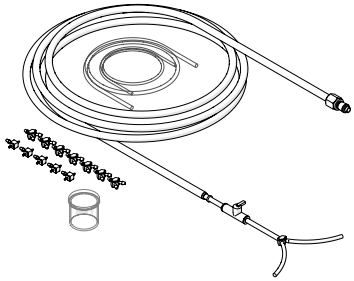

Fig. 10 - 6 mm ID irrigation kit
CMG009-

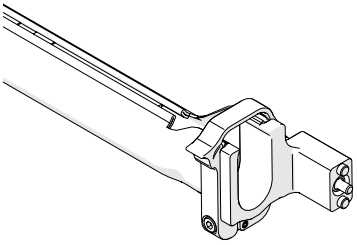

Fig. 11 - High temperature cable management - threaded mount
CXS113-

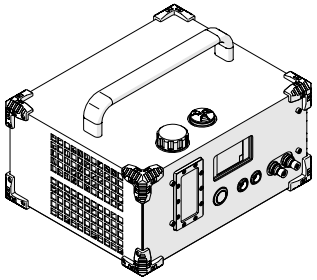

Fig. 12 - Cooler
DPA002

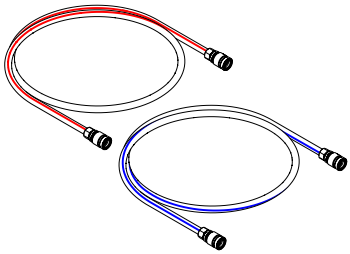

Fig. 13 - Hoses
DPA004-

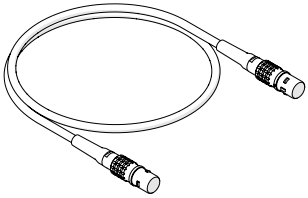

Fig. 14 - Auxiliary cable
UMA017-01

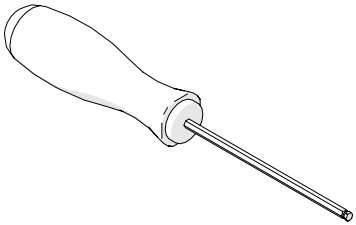

Fig. 15 - 3 mm hex driver
EA414

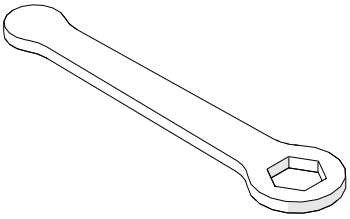

Fig. 16 - 3/8 in wrench
EA470

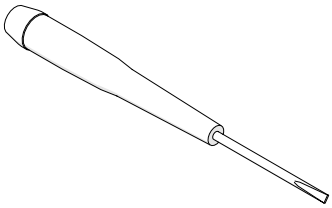

Fig. 17 - 3 mm flat driver
EA480

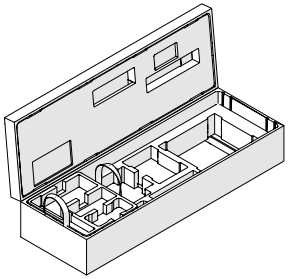

Fig. 18 - SKOOT HT case
DPA007

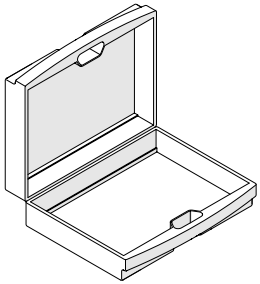

Fig. 19 - Umbilical case
EA421

4.1.2. Compatible Components

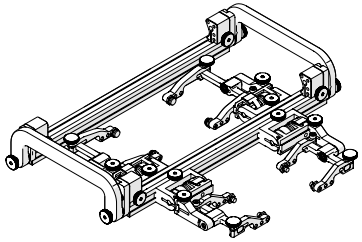

Fig. 20 - Low profile probe holder frame
CXG004-

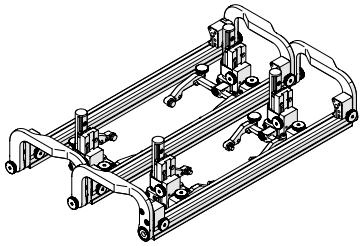

Fig. 21 - Vertical probe holder frame
CXG007-

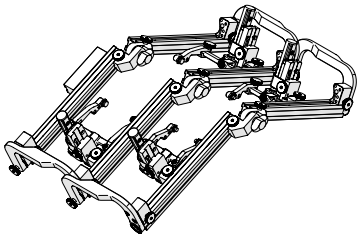

Fig. 22 - Pivoting probe holder frame
CXG013-

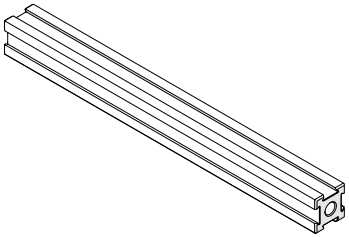

Fig. 23 - Frame bar
BG0038-

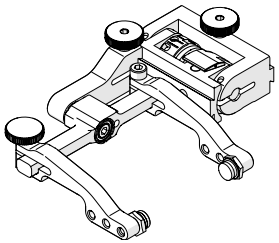

Fig. 24 - Slip joint probe holder
PHA012-

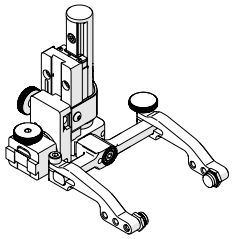

Fig. 25 - Vertical probe holder
PHA015-

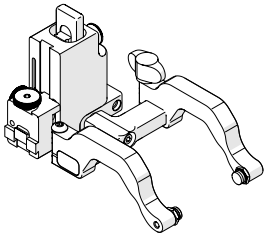

Fig. 26 - Heavy duty vertical probe holder
PHS043-

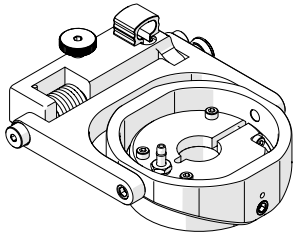

Fig. 27 - Corrosion thickness probe holder HT
PHS078-

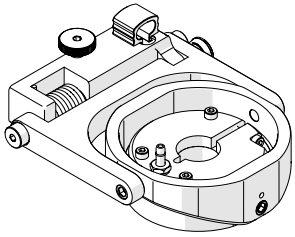

Fig. 28 - Corrosion thickness probe holder HT
PHS082-

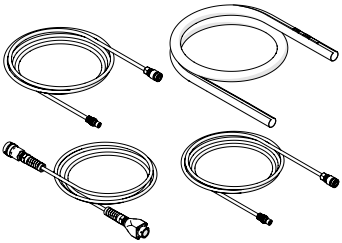

Fig. 29 - SKOOT HT Extension Kit
DPG005-

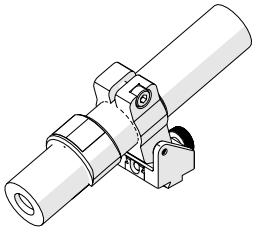

Fig. 30 - Battery powered optical guide
CXS080

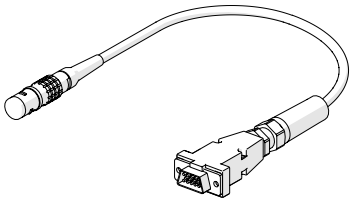

Fig. 31 - Encoder adapter
UMA010-

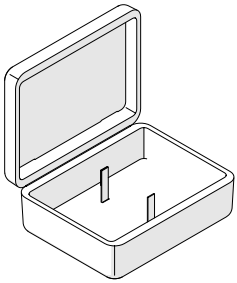

Fig. 32 - Umbilical / probe holder frame case
CXA023

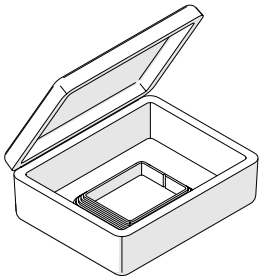

Fig. 33 - Motorized pump / umbilical case
CMA016

4.1.3. Child Products

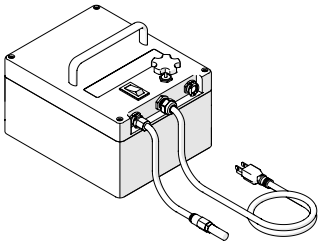

Fig. 34 - Motorized Couplant Pump
CMA015

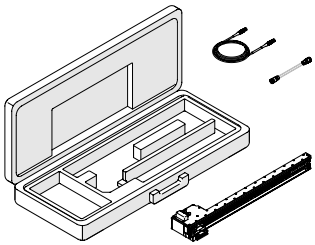

Fig. 35 - Motorized raster arm HT
EDG001-

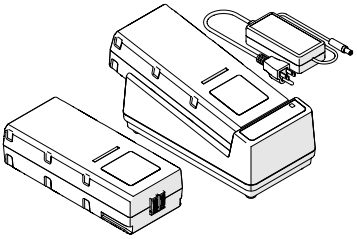

Fig. 36 - Battery Kit
DVG001-

4.2. Tools

4.2.1. Included Tools

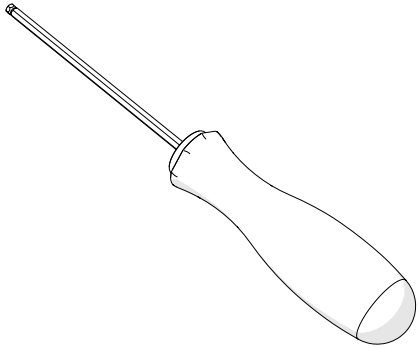

Fig. 37 - 3 mm hex driver

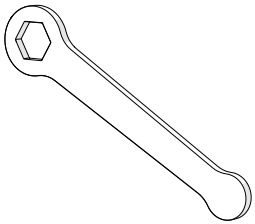

Fig. 38 - 3/8 in wrench

The included 3 mm hex driver *(Fig. 37)* is suitable for typical SKOOT HT and probe holder adjustments.

A 3/8 in wrench *(Fig. 38)* is provided to remove and install probe holder buttons.

The included 3 mm flat driver *(Fig. 39)* is useful for releasing the flaps of the Raster Arm HT's cable tray.

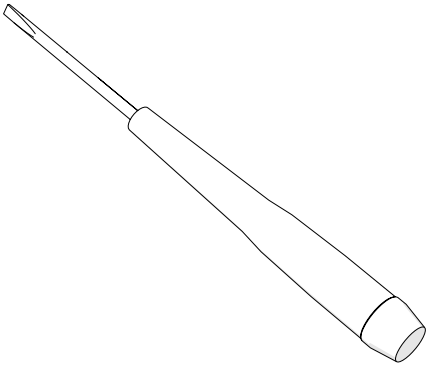

Fig. 39 - 3 mm flat driver

4.2.2. Optional Tools

Some specialized adjustments require tools that are not included with this kit.

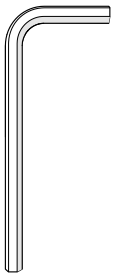

Fig. 40 - 1.5 mm hex wrench

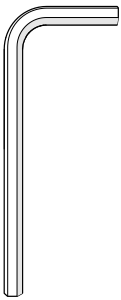

Fig. 41 - 2 mm hex wrench

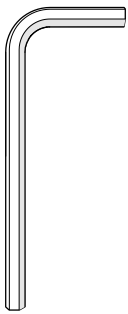

Fig. 42 - 2.5 mm hex wrench

Fig. 43 - 3 mm hex wrench

4.3. Base System Components

4.3.1. Crawler

WARNING! MAGNETIC MATERIAL. The wheels of the crawler produce an extremely strong magnetic field which may cause failure or permanent damage to items such as watches, memory devices, CRT monitors, medical devices or other electronics. People with pacemakers or ICD's must stay at least 25 cm *(10 in)* away.

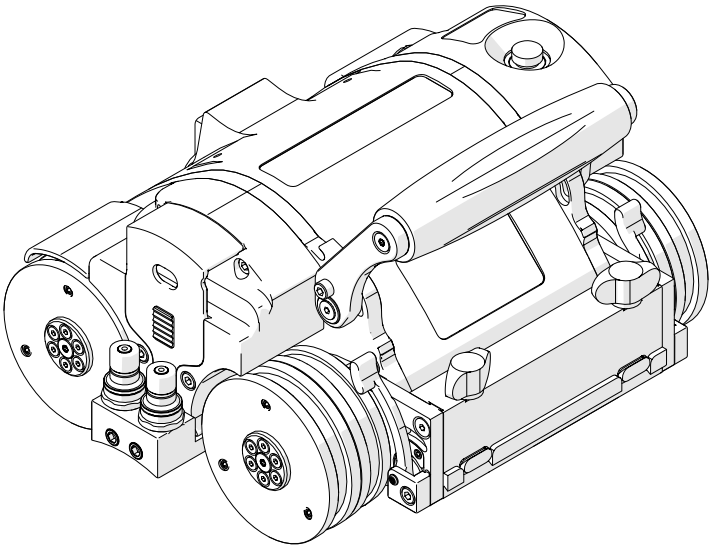

Fig. 44 - Cralwer

The crawler includes the motor encoder, umbilical connections and accessory mounting point.

4.3.1.1 Emergency Off Button

The red button located on the top left of the crawler provides an emergency off button to the entire system. When pressed, all power to the SKOOT HT system will disengage.

NOTE: Terminating system power may cause the crawler to freewheel down when operating in a vertical orientation.

Fig. 45 - Emergency off

4.3.2. Power Controller

CAUTION! DO NOT DISCONNECT UNDER LOAD. Shut off power before connection or disconnecting. Permanent damage to electronics could occur.

WARNING! There are no user serviceable components inside the power controller. Dangerous voltages can be present inside the case. Do **NOT** open. Return to manufacturer for repair.

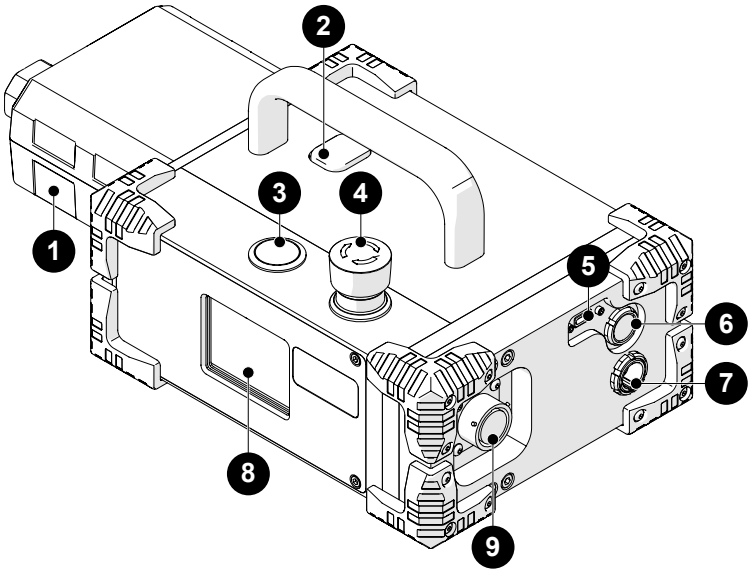

Fig. 46 - Power controller

The power controller accepts 25-45VDC power from the AC/DC power supply or battery. A start/stop safety circuit and physical **ON** and **OFF** push-buttons are integrated into the power controller.

1	AC/DC power supply	Connect plug from a properly grounded source. Use IEC320 cord approved for AC/DC power supply.
2	Release button	Unlatch the AC/DC power supply or battery from the power controller.

3	Power button	Activate system power by pressing *(and releasing)* the silver button.
4	Stop button	The red stop button latches down when pressed, this stop button shuts down the system. Twist the stop button clockwise to return to the released position. This must be done before power can be activated.
5	Scanlink™ connector	Connection for Scanlink devices.
6	CTRL socket	Connection for the auxiliary cable.
7	ENC socket	Connection for the encoder cable.
8	Status LCD	Power controller status display.
9	Umbilical connection	Connection for the umbilical.

In the event of a break in the stop circuit *(the stop circuit runs through the power controller cable, umbilical and the crawler's emergency stop button)* power will shut off.

> *NOTE: Before use, always inspect the power cable and plug for damage. The power controller should not be used if visible damage is present. Use of damaged components may be a safety hazard.*

4.3.2.1 AC/DC Power Supply

The 1 AC/DC power supply *(Fig. 46)* is used to connect the power controller to a suitable 100-240VAC, 50/60Hz grounded power source capable of supplying a minimum of 5 amps.

The safety of the power controller relies on the provision of a proper ground connection.

In environments with moisture present, a GFCI *(Ground Fault Circuit Interrupter)* must be used to ensure operator safety.

> *NOTE: Some generators or DC-AC inverters may introduce significant levels of noise to the system. This may degrade overall system performance or reduce the system life expectancy. Use of generators or DC-AC inverters is not recommended and are used at the operator's risk.*

4.3.3. SKOOT HT Umbilical

The umbilical is the backbone of the system, connecting the crawler to the power controller. While designed for high temperature operation, the umbilical must be protected in the high temperature cable management at all times.

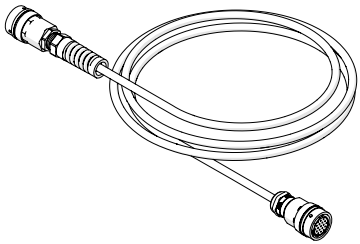

Fig. 47 - SKOOT HT umbilical

4.3.4. Handheld Controller

WARNING! MAGNETIC MATERIAL. The handheld controller contains magnetic material. Those with pacemakers or ICD's must stay at least 10 cm *(4 in)* away.

CAUTION! DO NOT DISCONNECT UNDER LOAD. Shut off power before connection or disconnecting. Permanent damage to electronics could occur.

The handheld controller is used to manipulate a scanner installed on an inspection surface. User settings and scan information are edited using the handheld controller.

The handheld controller utilizes a resistive touch screen, care should be taken to not use sharp or gritty objects on the screen as the touch membrane can scratch. If the screen is damaged, all programmed functions can still be accessed using the D-pad.

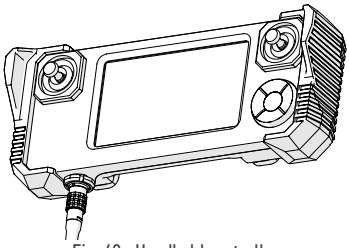

Fig. 48 - Handheld controller

*NOTE: Do **NOT** connect the handheld controller while the system is activated.*

4.3.5. Manipulation Handle

The manipulation handle is used to assist with the placement of the crawler onto the scan surface. As well, the manipulation handle can be used to make small adjustments to the direction of the crawler's travel.

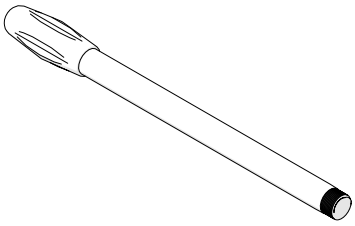

Fig. 49 - Manipulation handle

4.3.6. Auxiliary Cables

The auxiliary cables connect the handheld controller, cooler and power controller. 36VDC and network signals are used in the cable.

Both auxiliary cable connector ends are identical and interchangeable.

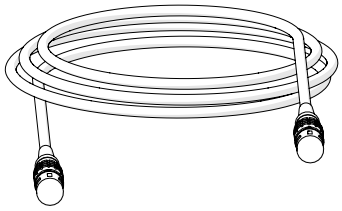

Fig. 50 - Auxiliary cable

*NOTE: Inspect the cable and connectors for damage before use. When any damage is evident, the cable must **NOT** be utilized. Use of a damaged cable may be a safety hazard and could also put other system components at risk.*

4.3.7. J300 Encoder Cable

The encoder cable connects the SKOOT HT system to the user's instrument. This cable allows transmission of two-axis position signals from the SKOOT HT to the instrument. The encoder cable also provides 5VDC from the user's instrument to the encoder isolation circuitry.

Various encoder styles are available for various instruments.

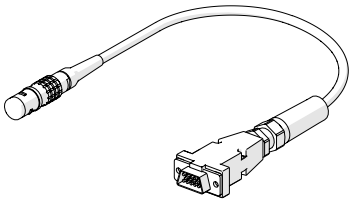

Fig. 51 - Encoder cable

*NOTE: Inspect the cable and connectors for damage before use. When damage is evident, the cable must **NOT** be used.*

4.3.8. Irrigation Kit

The irrigation kit provides a variety of hoses, fittings, connectors and splitters commonly used during non-destructive inspection.

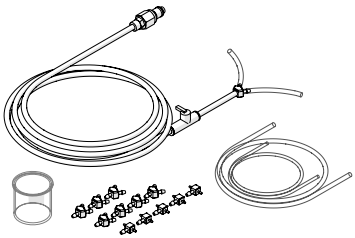

Fig. 52 - Irrigation kit

4.3.9. HT Cable Management

The high temperature cable management provides a means of protecting and organizing cables, tubes and hoses.

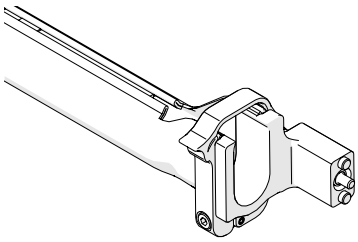

Fig. 53 - HT cable management

4.3.10. Cooler

The Cooler provides a flow of cooled coolant for use in actively cooling NDT equipment such as manual crawlers, motorized crawlers, probes, etc. that are equipped with cooling passages. *(see "Cooler" user manual for additional details and instructions)*

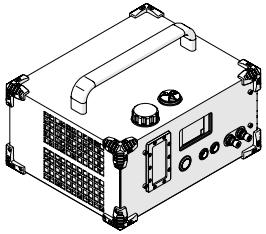

Fig. 54 - Cooler

4.3.11. Hoses

Blue and and red hoses are included with the Cooler system. The hoses are affixed with quick connects that do not drip or leak when connecting or disconnecting.

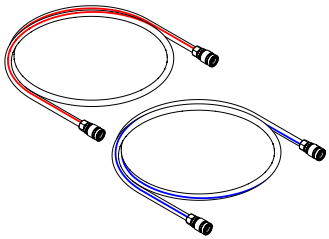

Fig. 55 - Hoses

4.3.12. Tools

Several tools are included for various scanner and accessory adjustment. *(see "Tools" on page 21 for additional details)*

4.3.13. Cases

Depending on the configuration selected at the time of purchase. This will determine the types and amount of cases included with the system.

4.4. Compatible Components

4.4.1. Low Profile Probe Holder Frame

The low profile probe holder frame carries up to four probes during limited access, circumferential weld inspection. Removal of the SKOOT HT handles and the use of the low profile probe holder frame allows inspection when radial clearance is limited.

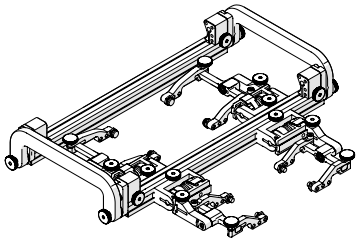

Fig. 56 - Low profile probe holder frame

4.4.2. Vertical Probe Holder Frame

The vertical probe holder frame carries up to six probes during circumferential weld inspection. Available in a myriad of configurations and lengths, the vertical probe holder frame attaches to the front of the SKOOT HT crawler.

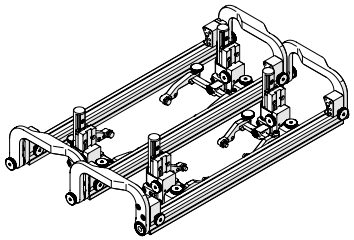

Fig. 57 - Vertical probe holder frame

4.4.3. Pivoting Probe Holder Frame

The pivoting probe holder frame carries up to six probes during longitudinal weld inspection. Available in a myriad of configurations and lengths, the pivoting probe holder frame may also be used for circumferential weld inspection.

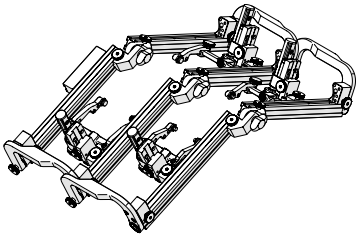

Fig. 58 - Pivoting probe holder frame

4.4.4. Frame Bar

Frame bars use dovetail grooves into which probe holders and accessories may be attached. Available in various lengths.

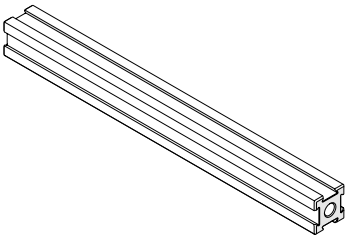

Fig. 59 - Frame bar

4.4.5. Slip Joint Probe Holder

The slip joint probe holder is generally used during limited access inspection. The low profile design requires minimal radial clearance. The slip joint probe holder is designed to carry many different types of probes and wedges, it is available with various types of yokes, arms and pivot buttons.

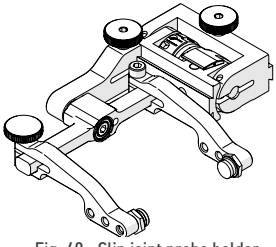

Fig. 60 - Slip joint probe holder

4.4.6. Vertical Probe Holder

The vertical probe holder is designed to carry many different types of probes and wedges. Available with various types of yokes, arms and pivot buttons. The vertical probe holder features several different adjustment options for each unique probe/wedge setup.

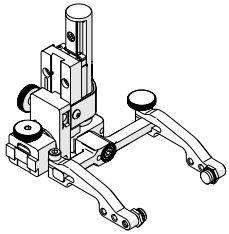

Fig. 61 - Vertical probe holder

4.4.7. Heavy Duty Vertical Probe Holder

The heavy duty vertical probe holder is designed to carry larger probes. Available with various arm, yoke and pivot buttons, the heavy duty vertical probe holder exerts more down force on a large footprint probe/wedge.

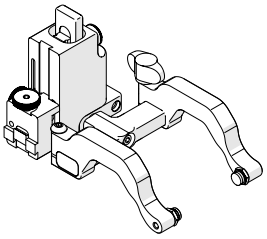

Fig. 62 - Heavy duty vertical probe holder

4.4.8. Corrosion Thickness Probe Holder HT

The corrosion thickness probe holder HT carries various probes for the purpose of corrosion inspection and is available with a flat wear plate.

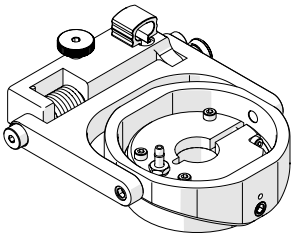

Fig. 63 - Corrosion thickness probe holder HT

4.4.9. SKOOT HT Extension Kit

The HydroFORM Cart carries an Olympus HydroFORM™ probe. The HydroFORM cart is designed to be used in conjunction with the heavy duty vertical probe holder.

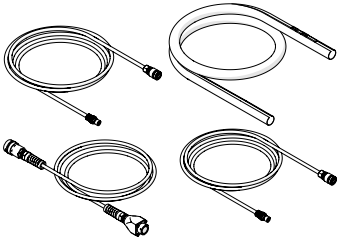

Fig. 64 - SKOOT HT extension kit

4.4.10. Battery Powered Optical Guide

The battery powered optical guide provides a red colour point of reference useful for guiding scanners along a given path *(i.e. a weld)*.

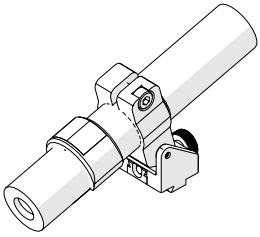

Fig. 65 - Battery powered optical guide

4.4.11. Encoder Adapter

The encoder adapter changes the scanner's built in encoder connector style.

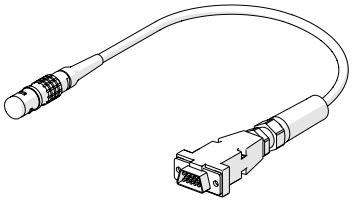

Fig. 66 - Encoder adapter

4.5. Child Products

4.5.1. Motorized Couplant Pump

The motorized couplant pump is a powered pumping unit used for supplying couplant fluid to the scanning surface.

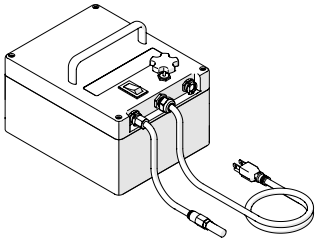

Fig. 67 - Motorized couplant pump

4.5.2. Motorized Raster Arm HT

The motorized raster arm is available in various lengths and offers programmable speed and travel settings.

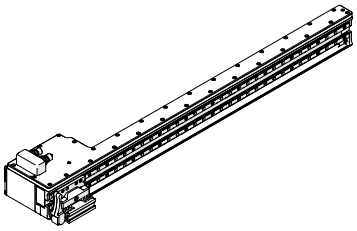

Fig. 68 - Motorized raster arm

4.5.3. Battery Kit

The rechargeable battery provides portable power to the crawler and components *(i.e. motorized raster arm)*.

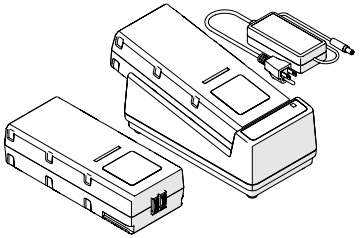

Fig. 69 - Battery kit

5.1. Transportation

CAUTION! PINCH / CRUSH HAZARD. BE CAREFUL when passing the **SKOOT HT** crawler through narrow ferrous *(magnetic)* openings, such as man-holes. The magnetic drive wheels can cause bodily harm if allowed to slam onto the walls of the opening.

5.2. Preparation for Safe Use

5.2.1. No Entry Fall Zone

WARNING! FALLING OBJECT HAZARD. The area below a crawler must be kept clear at all times. A clearly marked **NO ENTRY FALL ZONE** must be cordoned off directly below the area of crawler operation.

The area below a crawler must be kept clear at all times. A clearly marked NO ENTRY FALL ZONE must be cordoned off directly below the area of crawler operation, according to the dimensions shown in *(Fig. 70)*.

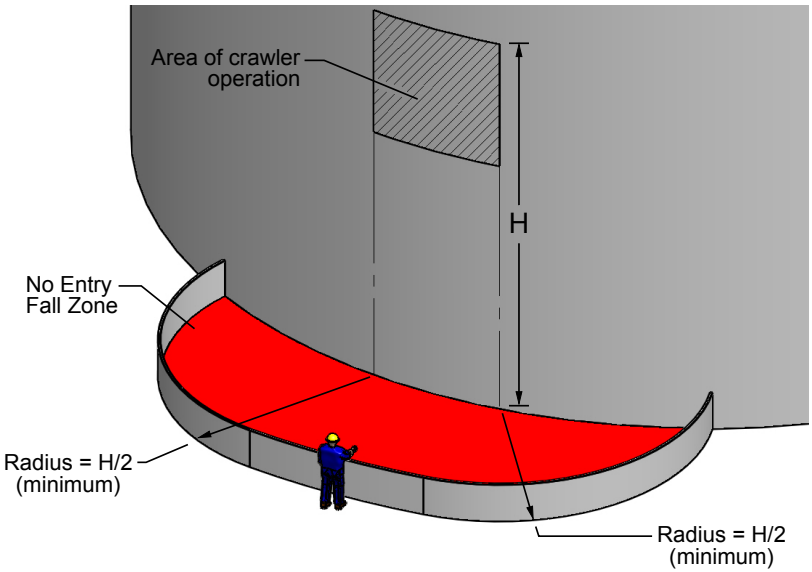

Fig. 70 - No entry fall zone

Example: If inspecting a tank that is 6 m *(20 ft)* tall, the No Entry Fall Zone radii must be no smaller than 3 m *(10 ft)* from the area below the area of crawler operation.

5.2.2. Tether Requirements and Attachment

WARNING! FALLING OBJECT HAZARD. Failure to comply with the warnings, instructions, and specifications in this manual could result in **SEVERE INJURY** or **DEATH**.

WARNING! Do **NOT** operate or place crawler on a surface higher than 2 m *(6 ft)* without a proper tether held taut at all times.

WARNING! Hook the tether hook to the provided lifting sling **BEFORE** placing the crawler on the surface to be inspected *(e.g. tank)*. **IMPORTANT**: Tether hook must have a safety latch to prevent accidental disconnection.

When used at a height greater than 2 m *(6 ft)*, the SKOOT HT crawler MUST be tethered with a proper tether system to prevent the crawler from falling. The tether system must:

- be capable of safely suspending the crawler from above in case the crawler detaches from the inspection surface;
- have sufficient capacity to catch and hold a 70 kg *(150 lb)* load;
- include a mechanism *(i.e. self retracting inertia reel fall arrester)* or person to continuously take up slack in the tether as the crawler moves;
- include a lifting hook with a safety latch to prevent accidental disconnection.
- be capable of withstanding contact with the inspection surface which may be up to 350°C *(662°F)*, without melting or degrading

Before placing the crawler on the surface to be inspected *(e.g. tank)*, attach the tether to the SKOOT HT.

CAUTION! The overhead attachment point for the tether must be located as close as possible to a location directly above the crawler to minimize dangerous swinging of the crawler should it detach from the inspection surface.

The handle of the SKOOT HT is to be used as an attachment point for a tether.

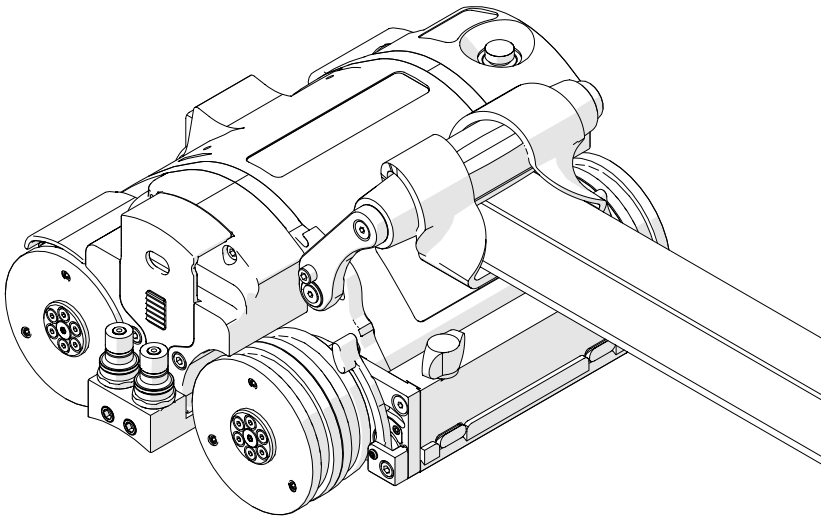

Fig. 71 - Tether attached to SKOOT HT handle

5.3. Preparation of Inspection Surface

WARNING! FALLING OBJECT HAZARD.
The inspection surface must adhere to the conditions outlined in sections "*Intended Use*" *on page 3* and "*Operating Environment*" *on page 5* of this manual.

- Remove build-up of scale, and other debris *(i.e. dirt, ice)* from surface on which the crawler is to drive. Excessive build-up will cause the wheels to lose magnetic attraction which may lead to wheel slippage or crawler detachment.
- Ensure that no obstructions *(other than standard butt welds)* or voids are in the drive path. Obstructions and voids could cause the crawler to fall if driven into or over.
- Ensure that there are no patches of non-ferrous material in the drive path of the crawler. If the crawler drives over a non-ferrous patch, it will lose magnetic attraction and will cause the crawler to fall.

5.4. System Connectivity

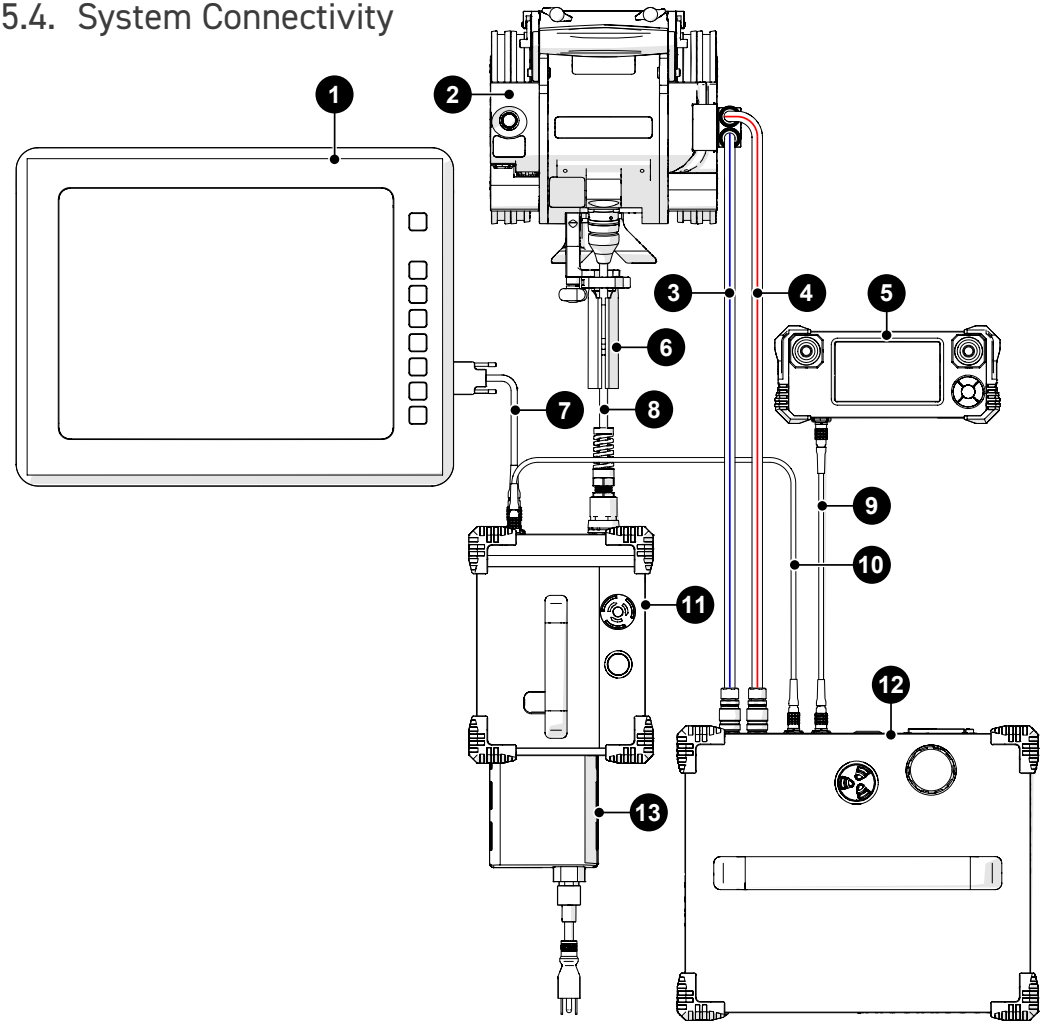

Fig. 72 - Standard configuration

BOM ID	Description	BOM ID	Description
1	User instrument	8	Umbilical
2	Crawler	9	Auxiliary cable
3	Blue hose	10	Short auxiliary cable
4	Red hose	11	Power controller
5	Handheld controller	12	Cooler
6	HT cable management	13	AC/DC power supply
7	Encoder cable		

To configure the SKOOT HT system, follow these steps:

CAUTION! DO NOT DISCONNECT UNDER LOAD. Shut off power before connection or disconnecting. Permanent damage to electronics could occur.

1. Attach the 6 HT cable management to the 2 crawler.
2. Connect the 11 power controller to the 2 crawler using the 8 umbilical.
3. Connect 5 handheld controller to 12 cooler using the 9 auxiliary cable.
4. Connect the 12 cooler to the 11 power controller using the 10 short auxiliary cable.
5. Connect the 3 blue hose to either port on the 2 crawler, Connect the opposite end of the blue hose to the OUT port on the 12 cooler.
6. Connect the 4 red hose to either port on the 2 crawler, Connect the opposite end of the red hose to the OUT port on the 12 cooler.
7. Route the 8 umbilical, 3 blue hose and the 4 red hose through the 6 HT cable management. *(see Hose Connection and Routing on page 85 for additional details).*
8. Connect the 1 user's instrument to the 11 power controller using the 7 encoder cable.
9. Insert 13 AC/DC power supply into the 11 power controller.
10. *(see "Configurations" on page 36)* to setup a particular component.

5.5. Configurations

5.5.1. Crawler with Multiple Probe Holders

5.5.1.1 Low Profile Probe Holder Frame

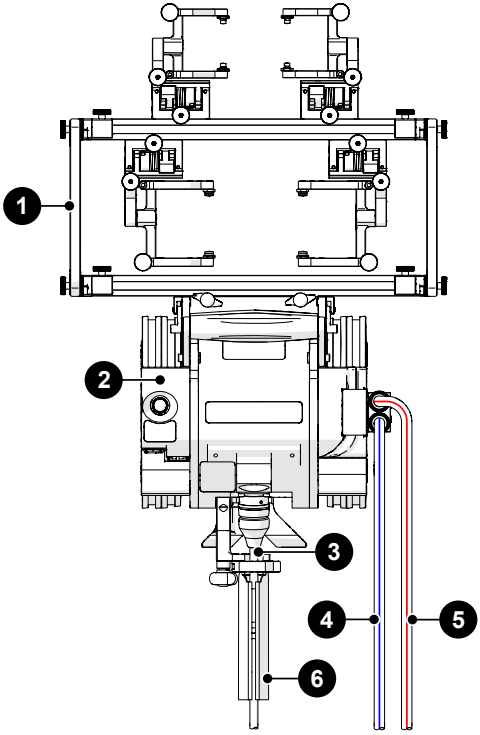

Fig. 73 - Low profile probe holder frame

BOM ID	Description
1	Low profile probe holder frame
2	Crawler
3	Umbilical
4	Blue hose
5	Red hose
6	HT Cable management

To configure the SKOOT HT system for scanning using a low profile probe holder frame, follow these steps *(see "Low Profile Probe Holder Frame - Flat or Circumferential Only" on page 67)*:

CAUTION! DO NOT DISCONNECT UNDER LOAD. Shut off power before connection or disconnecting. Permanent damage to electronics could occur.

1. Attach the 6 HT cable management to the 2 crawler.
2. Connect the 3 umbilical to the 2 crawler.
3. Connect the 4 blue hose to either port on the 2 crawler.
4. Connect the 5 red hose to either port on the 2 crawler.
5. Route the 3 umbilical, 4 blue hose and the 5 red hose through the 6 HT cable management. *(see Hose Connection and Routing on page 85 for additional details).*
6. Attach a configured 1 low profile probe holder frame *(see "Low Profile Probe Holder Frame - Flat or Circumferential Only" on page 67)* to the 2 crawler *(see "Swivel Mount" on page 44)*.

5.5.1.2 Vertical Probe Holder Frame

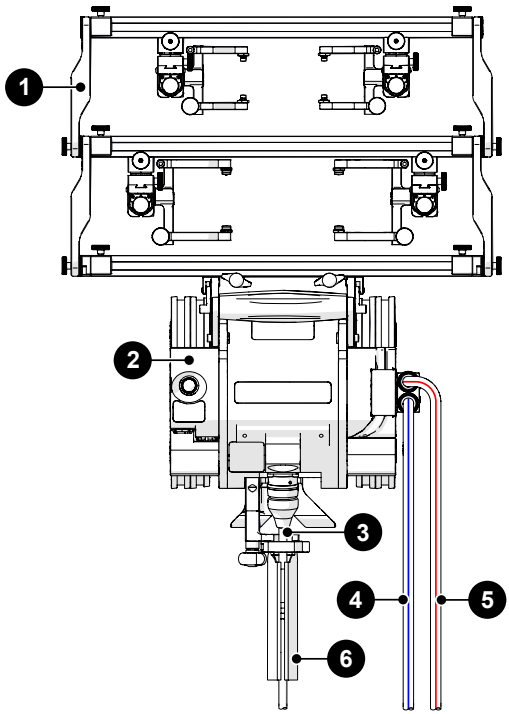

Fig. 74 - Vertical probe holder frame

BOM ID	Description
1	Vertical probe holder frame
2	Crawler
3	Umbilical
4	Blue hose
5	Red hose
6	HT Cable management

To configure the SKOOT HT system for scanning using a vertical profile probe holder frame, follow these steps *(see "Vertical Probe Holder Frame - Flat or Circumferential Only" on page 71)*:

CAUTION! DO NOT DISCONNECT UNDER LOAD. Shut off power before connection or disconnecting. Permanent damage to electronics could occur.

1. Attach the 6 HT cable management to the 2 crawler.
2. Connect the 3 umbilical to the 2 crawler.
3. Connect the 4 blue hose to either port on the 2 crawler.
4. Connect the 5 red hose to either port on the 2 crawler.
5. Route the 3 umbilical, 4 blue hose and the 5 red hose through the 6 HT cable management. *(see Hose Connection and Routing on page 85 for additional details).*
6. Attach a configured 1 vertical probe holder frame *(see "Vertical Probe Holder Frame - Flat or Circumferential Only" on page 71)* to the 2 crawler *(see "Swivel Mount" on page 44).*

5.5.1.3 Pivoting Probe Holder Frame

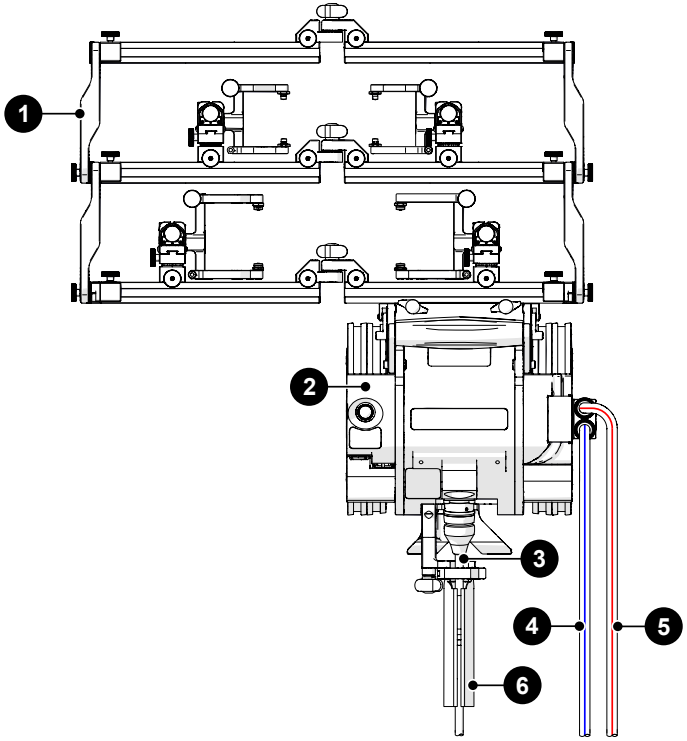

Fig. 75 - Pivoting probe holder frame

BOM ID	Description
1	Vertical probe holder frame
2	Crawler
3	Umbilical
4	Blue hose
5	Red hose
6	HT Cable management

To configure the SKOOT HT system for scanning using a pivoting probe holder frame, follow these steps *(see "Pivoting Probe Holder Frame" on page 75)*:

CAUTION! DO NOT DISCONNECT UNDER LOAD. Shut off power before connection or disconnecting. Permanent damage to electronics could occur.

1. Attach the 6 HT cable management to the 2 crawler.
2. Connect the 3 umbilical to the 2 crawler.
3. Connect the 4 blue hose to either port on the 2 crawler.
4. Connect the 5 red hose to either port on the 2 crawler.
5. Route the 3 umbilical, 4 blue hose and the 5 red hose through the 6 HT cable management. *(see Hose Connection and Routing on page 85 for additional details).*
6. Attach a configured 1 pivoting probe holder frame *(see "Pivoting Probe Holder Frame" on page 75)* to the 2 crawler *(see "Swivel Mount" on page 44)*.

5.5.1.4 Flange

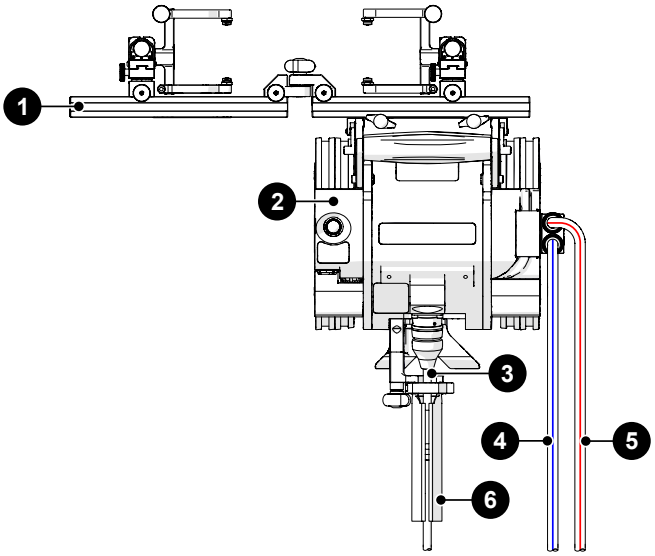

Fig. 76 - Pivoting probe holder frame configured for flange scanning

BOM ID	Description
1	Vertical probe holder frame
2	Crawler
3	Umbilical
4	Blue hose
5	Red hose
6	HT Cable management

To configure the SKOOT HT system for scanning using a pivoting probe holder frame configured for flange scanning, follow these steps *(see "Pivoting Probe Holder Frame - Flange Scanning" on page 79)*:

CAUTION! DO NOT DISCONNECT UNDER LOAD. Shut off power before connection or disconnecting. Permanent damage to electronics could occur.

1. Attach the 6 HT cable management to the 2 crawler.
2. Connect the 3 umbilical to the 2 crawler.
3. Connect the 4 blue hose to either port on the 2 crawler.
4. Connect the 5 red hose to either port on the 2 crawler.
5. Route the 3 umbilical, 4 blue hose and the 5 red hose through the 6 HT cable management. *(see Hose Connection and Routing on page 85 for additional details).*
6. Attach a configured 1 flange probe holder frame *(see "Pivoting Probe Holder Frame - Flange Scanning" on page 79)* to the 2 crawler *(see "Swivel Mount" on page 44).*

5.6. Crawler

5.6.1. Swivel Mount

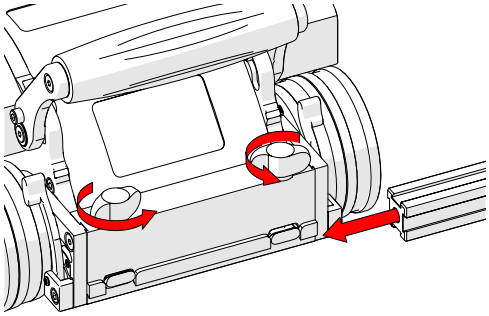

Fig. 77 - Frame bar installation

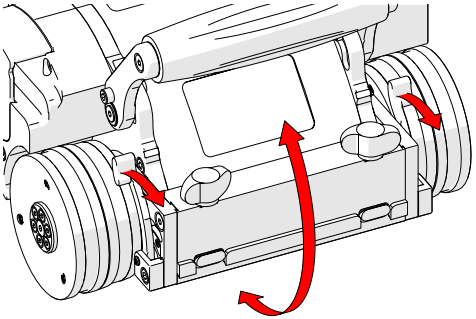

Fig. 78 - Swivel mount angle

Located at the front of the crawler, the swivel mount is used to connect scanning accessories such as a Raster Arm HT module, probe frame system or corrosion thickness probe holder.

Rotate the two black wing knobs *(Fig. 77)* to loosen the dovetail jaws. Slide the accessory's frame bar along the dovetail jaws. Rotate the two black wing knobs to clamp the frame system/Raster Arm HT in place.

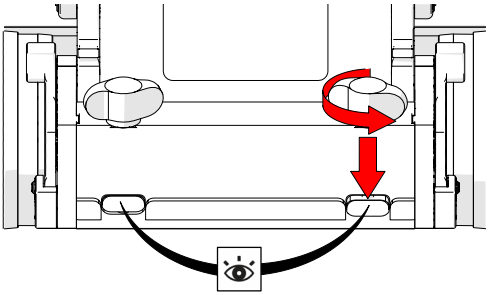

Fig. 79 - Align dovetail jaws

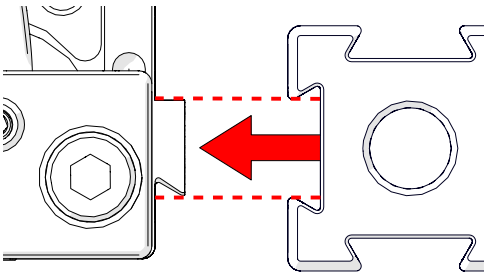

Fig. 80 - Mount frame bar

Alternatively, accessories can also be mounted straight to the swivel mount. Rotate the black wing knobs aligning the dovetail jaws with the mount's grooves *(Fig. 79)*. Press the frame bar or accessory to the swivel mount *(Fig. 80)* and tighten the black wing knobs.

The front mount utilizes two levers *(Fig. 78)* to lock the front mount at the desired angle.

The etched line *(Fig. 81)* near the base of the swivel mount can be used to align the front swivel mount to a horizontal position.

NOTE: The front mount must be horizontal when using the pivoting probe holder frame to scan longitudinally on piping.

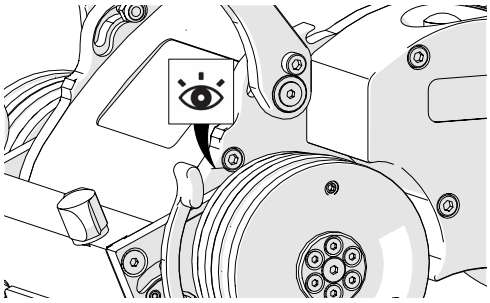

Fig. 81 - Return mount to horizontal position

5.6.2. Umbilical

WARNING! FALLING OBJECT HAZARD. or operating at heights greater than 2 m *(6 ft)*, ensure the umbilical strain relief never points upwards as shown in *(Fig. 85)*. The crawler could fall. **SEVERE INJURY** or **DEATH** could result.

To mount the umbilical to the crawler, follow these steps

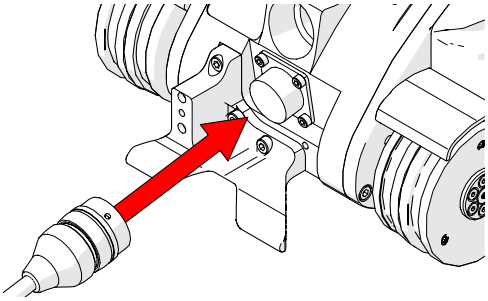

Fig. 82 - Connect to umbilical

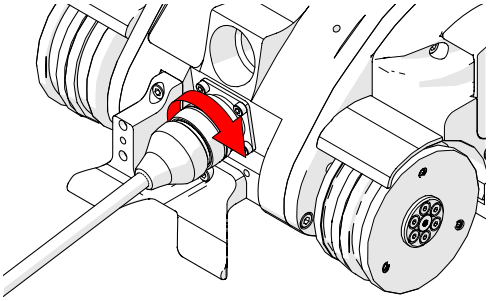

Fig. 83 - Align with crawler's umbilical mount

1. Align the pins of the umbilical to the connector at the rear of the SKOOT HT *(Fig. 82)*.
2. Twist the umbilical's sleeve clockwise locking the umbilical in place *(Fig. 83)*.

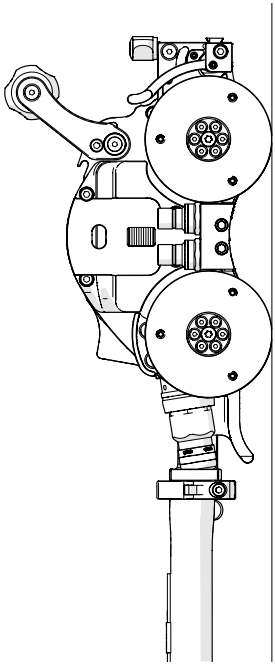

Fig. 84 - Correct umbilical use

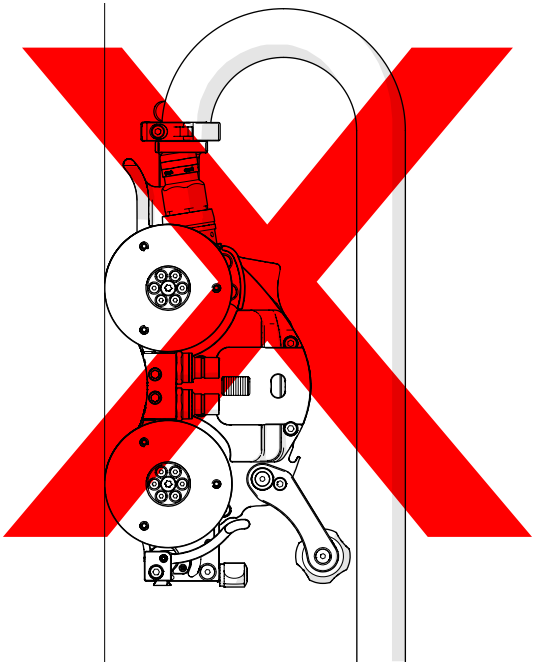

Fig. 85 - Incorrect umbilical use

3. Ensure the umbilical strain relief never points downwards during operation *(Fig. 85)*.

5.6.3. Handle

The handle can be lowered to achieve low profile scanning.

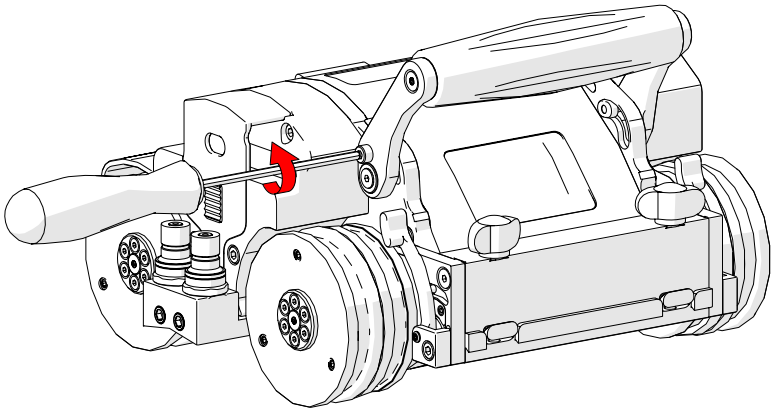

Fig. 86 - Unscrew handle lock screw

1. To lower the handle, use the supplied 3 mm driver to loosen the handle lock screws on either side of the handle *(Fig. 86)*.

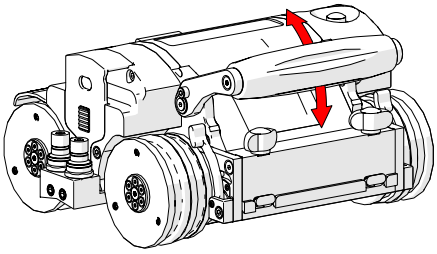

Fig. 87 - Pivot handle as desired

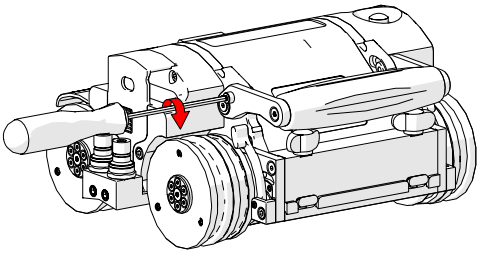

Fig. 88 - Tighten lock screws

2. Pivot the handle as required *(Fig. 87)*.
3. Tighten the handle lock screws when complete *(Fig. 88)*.

5.6.4. Emergency Off Button

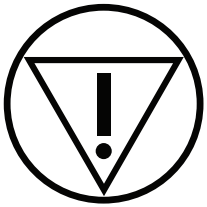

Fig. 89 - Emergency off

The red button located on the top left of the crawler provides an emergency off button to the entire system. When pressed, all power to the SKOOT HT system will disengage.

To restore system power, it is necessary to press the green power button located on the power controller *(see "Power Controller" on page 23)*.

> *NOTE: Terminating system power may cause the crawler to freewheel down when operating in a vertical orientation.*

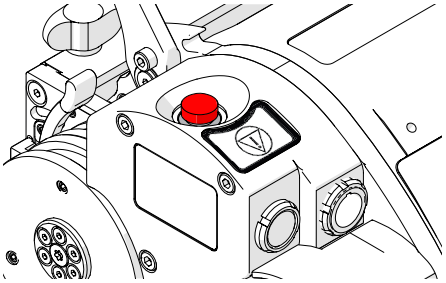

Fig. 90 - Emergency off button

5.6.5. Cable Retainer

Located at the on the side of the crawler, the cable retainer offers a means of cable management for cables, hoses and tubes. Gently apply pressure to the grooves of the cable retainer and lift *(Fig. 91)*. Route cables, hoses or tubes through the retainer and then press the cable retainer down *(Fig. 92)*.

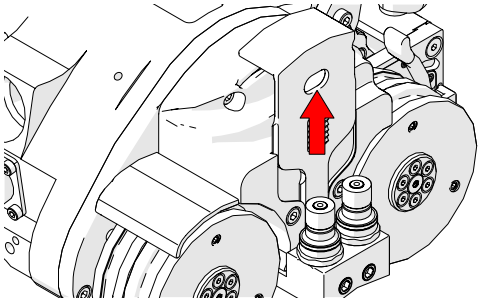

Fig. 91 - Lift retainer by hand

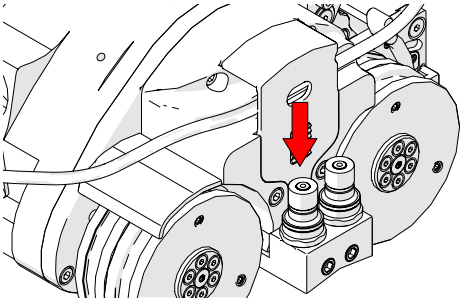

Fig. 92 - Place cables and hoses then close retainer

5.6.6. Manipulation Handle

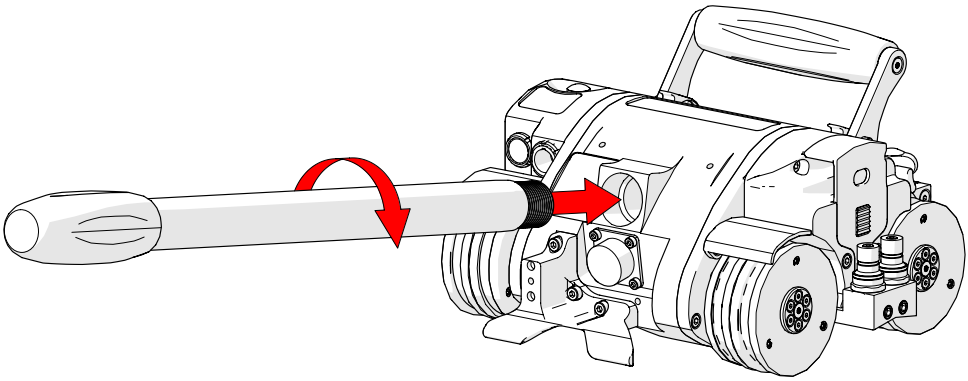

Fig. 93 - Manipulation handle

The manipulation handle *(Fig. 93)* provides a means of orienting the scanner direction. The handle can be used to set initial scanner direction as well as occasional orientation correction. The manipulation handle is not intended as a tool for constant adjustment during a scan operation.

The handle may be removed when additional scanner clearance is required.

5.6.7. Quick Connect Fitting

Located on the side of the crawler, the quick connect fittings provide a connection point for hose fittings.

Press the hose fitting onto the quick connect to attach *(Fig. 94)*.

> *TIP: The blue and red hose may be connected to either quick connect.*

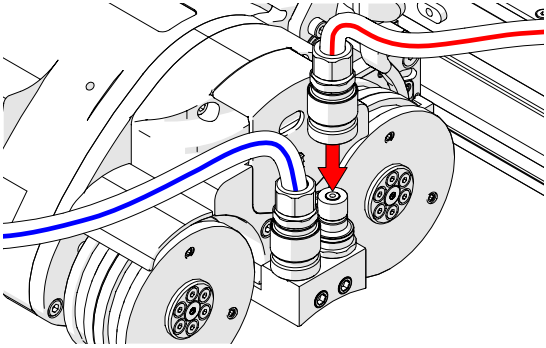

Fig. 94 - Quick connect fitting

Ensure that hoses are routed through the HT cable management system *(see Hose Connection and Routing on page 85 for additional details)*.

5.7. Handheld Controller

WARNING! MAGNETIC MATERIAL. The handheld controller produces a strong magnetic field which may cause failure or permanent damage to items such as watches, memory devices, CRT monitors, medical devices or other electronics.

People with pacemakers or ICD's must stay at least 10 cm *(4 in)* away.

CAUTION! DO NOT DISCONNECT UNDER LOAD. Shut off power before connection or disconnecting. Permanent damage to electronics could occur.

5.7.1. Magnetic Mounts

Magnetic mounts on the rear of the handheld controller assist in preventing the handheld controller from falling.

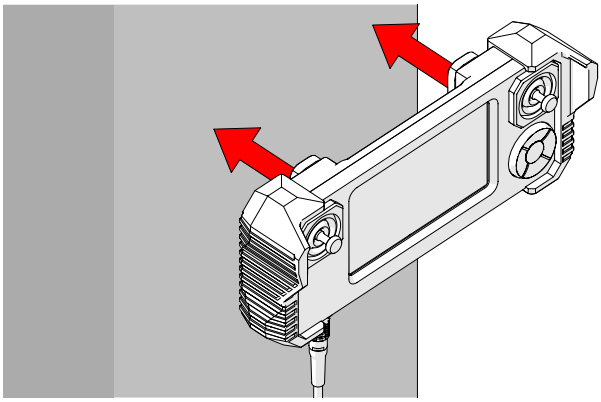

Fig. 95 - Mount to ferrous surfaces

5.8. Probe Holder

5.8.1. Heavy Duty Vertical Probe Holder

A	Latch
B	Probe Holder Arm Adjustment Knob
C	Yoke
D	Probe Holder Arms
E	Pivot Buttons
F	Arm Clamp Screw
G	Probe Holder Adjustment Knob
H	Vertical Adjustment Knob

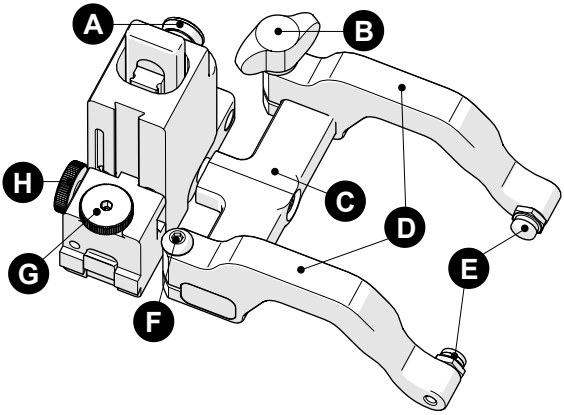

Fig. 96 - Heavy duty vertical probe holder

5.8.1.1 Probe Holder Setup

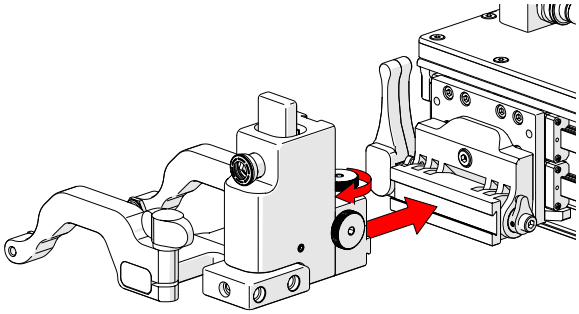

Fig. 97 - Mount probe holder to carrier

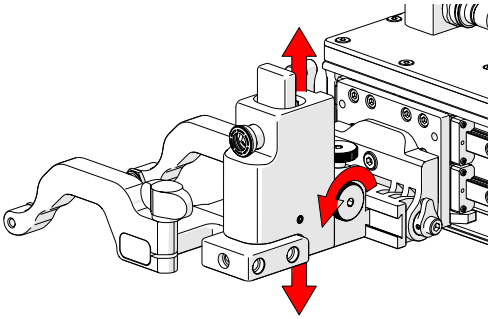

Fig. 98 - Vertical adjustment

1. Loosen the probe holder adjustment knob *(Fig. 97)* and mount the heavy duty vertical probe holder's dovetail jaw to the carrier.
2. The vertical adjustment knob *(Fig. 98)* allows the heavy duty vertical probe holder's height adjustment. This adjustment also controls the probe holders spring tension.

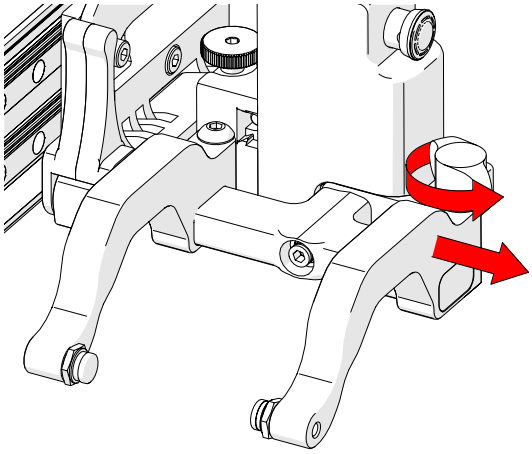

Fig. 99 - Remove outer arm

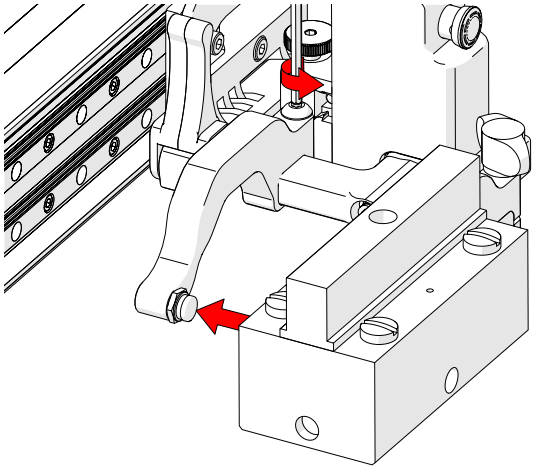

Fig. 100 - Adjust inner arm

3. Loosen the probe holder adjustment knob and remove the outer probe holder arm *(Fig. 99)*.
4. Loosen the arm clamp screw *(Fig. 100)*.
5. Place the wedge on the pivot button of the inner probe holder arm *(Fig. 99)*.

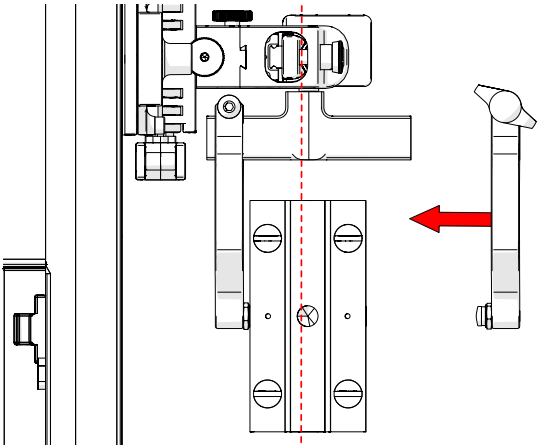

Fig. 101 - Align probe with yoke

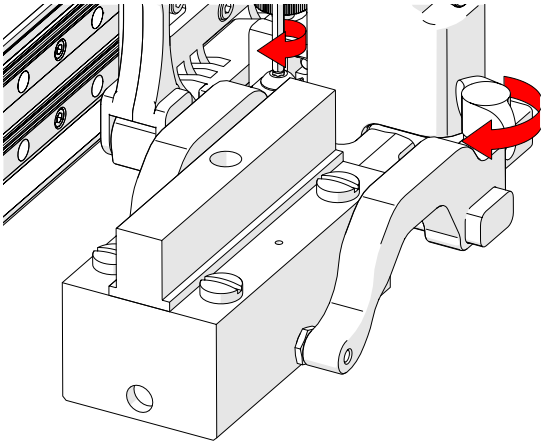

Fig. 102 - Tighten knobs and screws

6. Align the middle of the wedge with the centre of the yoke *(Fig. 101)*.
7. Tighten both the probe holder adjustment knob and the arm clamp screw *(Fig. 102)* while ensuring the wedge remains centred with the yoke.

5.8.1.2 Probe Holder Vertical Adjustment

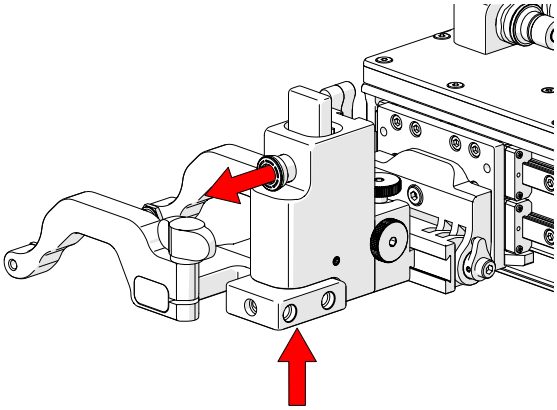

Fig. 103 - Press up and pull latch

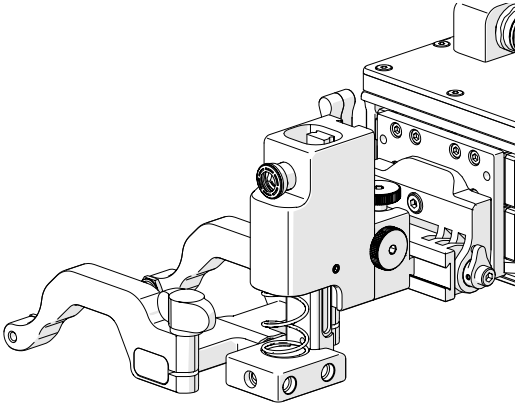

Fig. 104 - Lowered toward scan surface

1. Gently lift the heavy duty vertical probe holder and simultaneously pull the latch *(Fig. 103)*. This action will unlock the probe holder. Slowly lower the probe holder towards the scan surface *(Fig. 104)*.

5.8.1.3 Probe Holder Left/Right Conversion

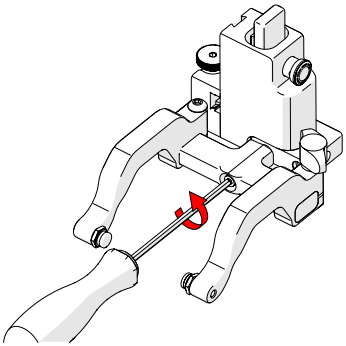

Fig. 105 - Remove yoke

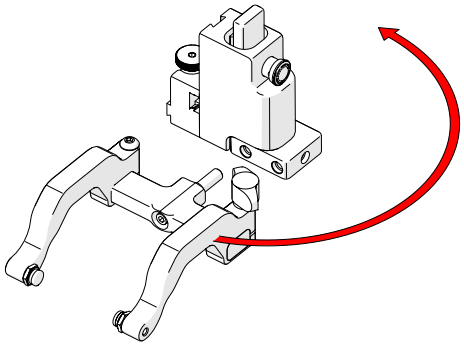

Fig. 106 - Orient to opposite side

1. Using the supplied 3 mm driver, unscrew the yoke *(Fig. 105)*.
2. Position the yoke and arms to the opposite side of the probe holder *(Fig. 106)*.

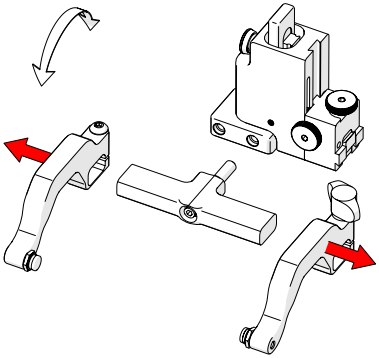

Fig. 107 - Remove probe holder arms

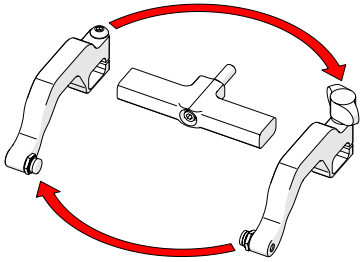

Fig. 108 - Reverse position around yoke

3. Loosen the arm clamp screw and the probe holder arm adjustment knob allowing removal of the probe holder arms *(Fig. 107)*.
4. Position the removed arms to the opposite sides of the yoke *(Fig. 108)*.

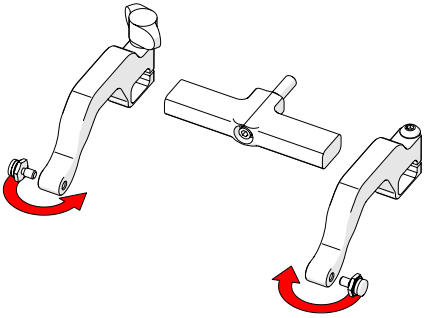

Fig. 109 - Position pivot buttons

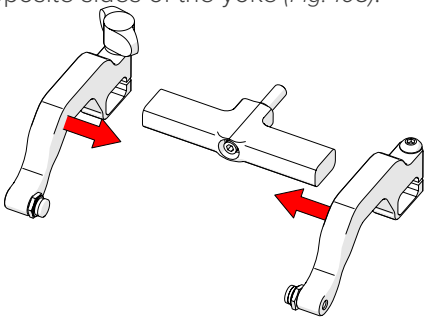

Fig. 110 - Place arms back onto yoke

5. Position the pivot buttons to the inside of the probe holder arms *(Fig. 109)*.
6. Place the probe holder arms on the yoke and tighten the arm clamp screw and probe holder adjustment knob *(Fig. 110)*.
7. Screw the yoke to the probe holder *(Fig. 111)*.

> *TIP: When using a standard yoke length, position the yoke in the threaded hole closest to the frame bar. When using a long yoke length, position the yoke in the threaded hole furthest from the frame bar.*

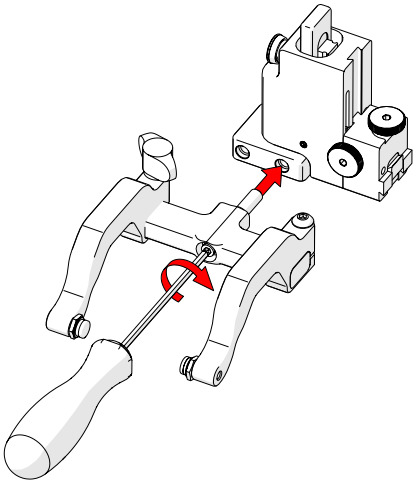

Fig. 111 - Screw into threaded hole

5.8.1.4 Probe Holder 90° Adjustment

1. Remove the yoke using the supplied 3 mm hex driver *(Fig. 105)*.
2. Orient the yoke to the front of the probe holder and screw the yoke into the threaded hole provided *(Fig. 112)*.

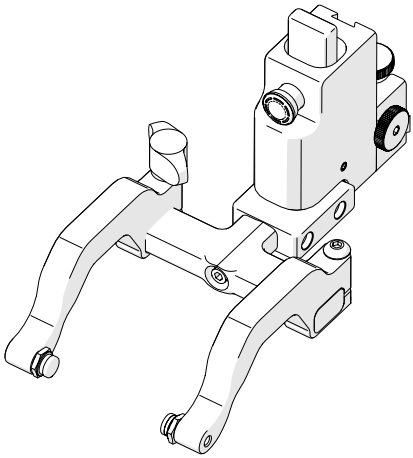

Fig. 112 - 90° probe holder positioning

5.8.2. Vertical Probe Holder

A	Latch
B	Probe Holder Adjustment Knob
C	Vertical Adjustment Knob
D	Pivot Buttons
E	Probe Holder Arms
F	Yoke
G	Probe Holder Arm Adjustment Knob
H	Transverse Adjustment Screw
I	Frame Bar

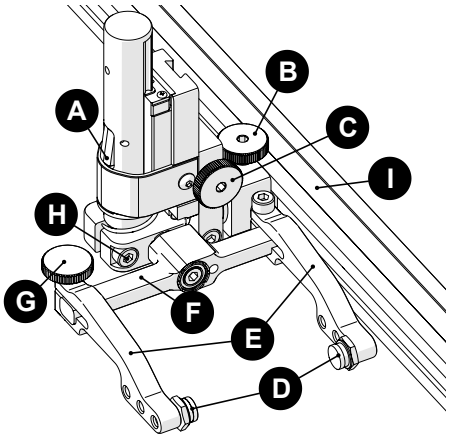

Fig. 113 - Vertical probe holder

5.8.2.1 Probe Holder Setup

To mount a UT wedge in the probe holder, follow these steps

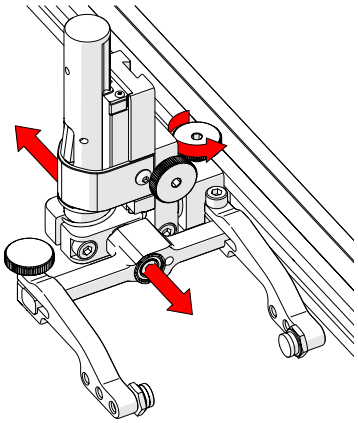

Fig. 114 - Adjust on frame bar

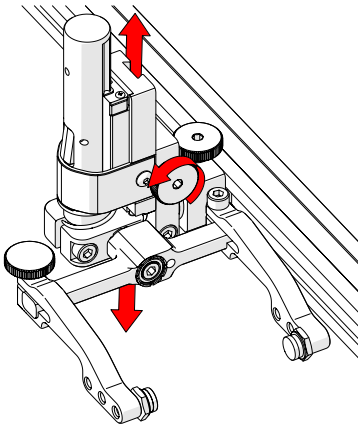

Fig. 115 - Vertical adjustment

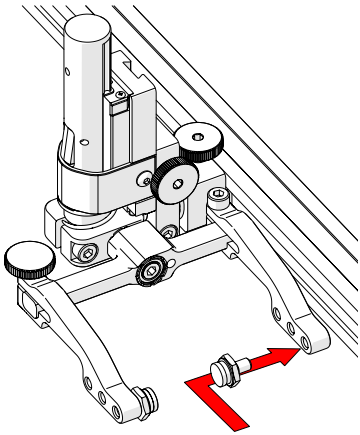

Fig. 116 - Place buttons

1. The probe holder adjustment knob allows the probe holder to be attached to a frame bar, as well as horizontal positioning on a frame bar *(Fig. 114)*.
2. The vertical adjustment knob allows the vertical probe holder height adjustment *(Fig. 115)*.
3. Position the pivot buttons where necessary. When a narrow scanning footprint is required, use the pivot button holes closest to the yoke *(Fig. 116)*.

> ***TIP**: Probe pivoting may be impeded when closer to the yoke.*

To mount a UT wedge in the probe holder, follow these steps:

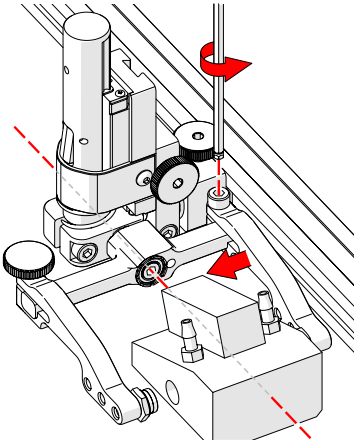

Fig. 117 - Adjust inner arm

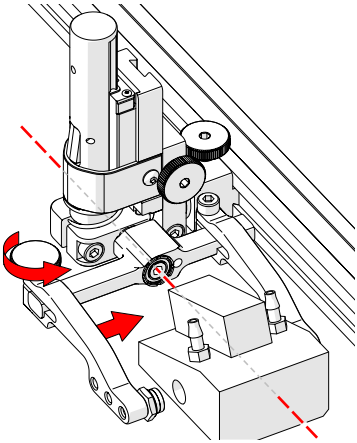

Fig. 118 - Adjust outer arm

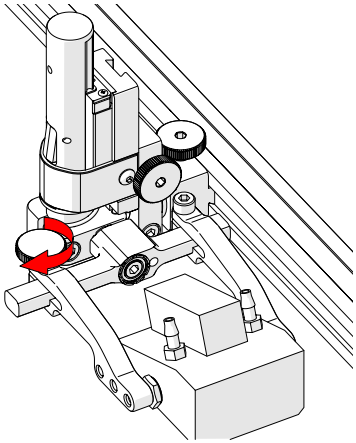

Fig. 119 - Tighten arm knob

4. Position the wedge on the inner probe holder arm *(Fig. 117)*.

> *TIP: The probe holder yoke can accommodate many different probe and wedge sizes of varying widths. It is best to centre the wedge with the yoke's pivot axis. This can reduce wedge 'rocking' when scanning. Position the inner probe holder arm accordingly (Fig. 117) using the supplied 3 mm hex driver (Fig. 37).*

5. Loosen the probe holder arm adjustment knob *(Fig. 118)* and slide the probe holder arm along the yoke pinching the wedge in place.
6. Tighten the probe holder arm adjustment knob *(Fig. 119)*.

5.8.2.2 Probe Holder Vertical Adjustment

To adjust the probe holder vertically, follow these steps:

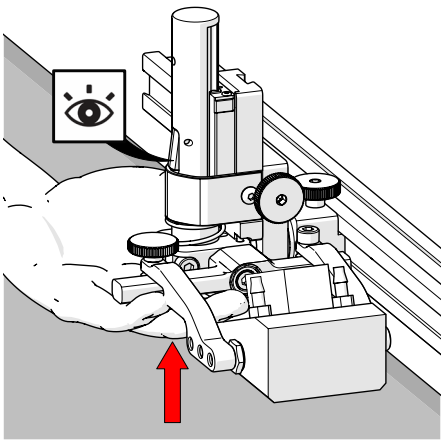

Fig. 120 - Latch probe holder

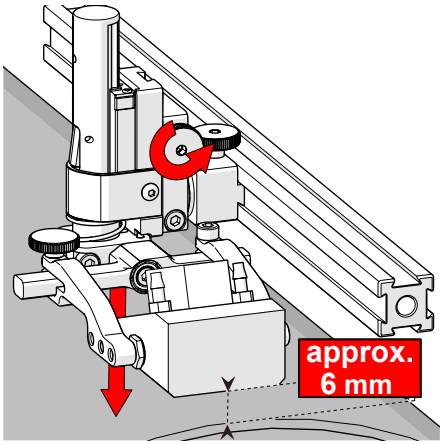

Fig. 121 - Lower toward scan surface

1. Ensure the probe holder is in the latched, upper position. Lift the probe holder until the latch is fully exposed and snaps out to lock *(Fig. 120)*.
2. Loosen the vertical adjustment knob and slide the probe holder down until the wedge is approximately 6 mm *(¼ in)* above inspection surface.
3. Tighten the vertical adjustment knob *(Fig. 121)*.

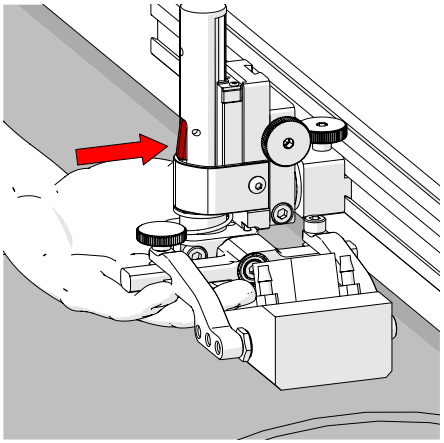

Fig. 122 - Press latch button

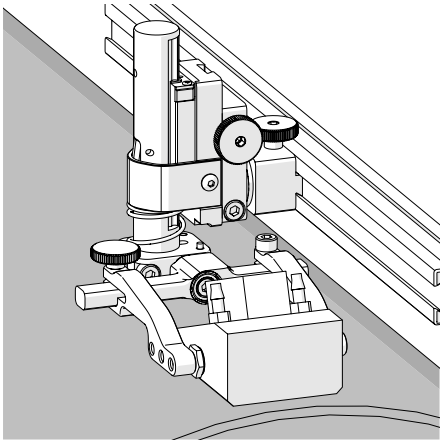

Fig. 123 - Lower toward scan surface

4. Lift the yoke slightly and press the latch button *(Fig. 122)*, then slowly lower towards scanning surface to apply spring pressure to the wedge *(Fig. 123)*.

> *TIP: If less spring force is desired, refer to step 2 and place the wedge approximately 20 mm (¾ in) above inspection surface.*

5.8.2.3 Probe Holder Transverse Adjustment

To adjust the probe holder's transverse angle, follow these steps:

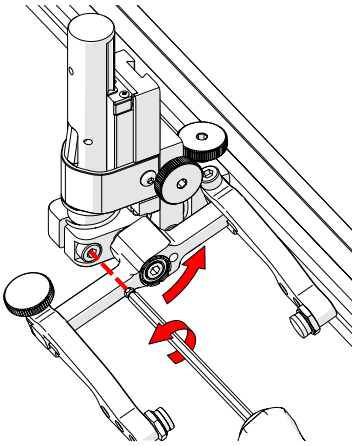

Fig. 124 - Loosen 3 mm screw

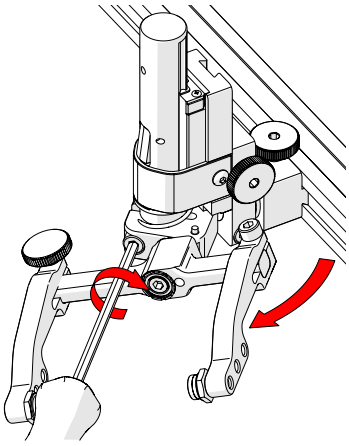

Fig. 125 - Rotate and tighten

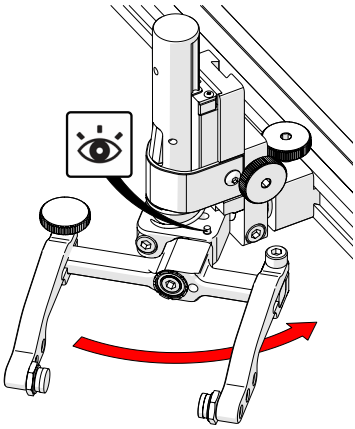

Fig. 126 - Stop post locates 90°

1. Ensure the probe holder is in latched, upper position *(Fig. 120)*.
2. Using the supplied 3 mm hex driver loosen the transverse adjustment screw *(Fig. 124)* and rotate the yoke about the vertical shaft achieving the desired angle.
3. Tighten the transverse adjustment screw *(Fig. 125)*.

To return the transverse adjustment to neutral *(90°)*. The probe holder must be in the latched, upper position *(Fig. 120)*. Rotate the yoke until the stop post contacts the base of the probe holder *(Fig. 126)*. Then tighten the transverse adjustment screw.

5.8.2.4 Probe Holder Longitudinal Adjustment

To adjust the probe holder's vertical angle for longitudinal scanning, follow these steps:

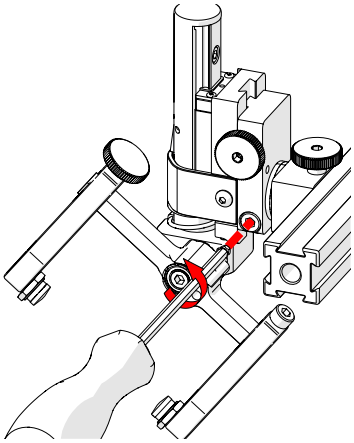

Fig. 127 - Loosen 3 mm screw

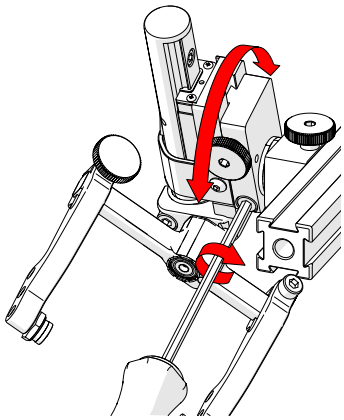

Fig. 128 - Rotate to position

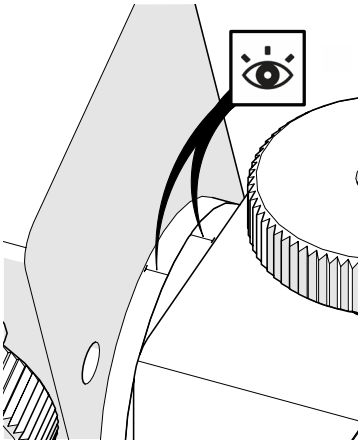

Fig. 129 - Line up markers

1. Ensure the probe holder is in latched, upper position *(Fig. 120)*.
2. Using the supplied 3 mm hex driver *(Fig. 37)*, loosen the longitudinal adjustment screw *(Fig. 127)*.
3. Rotate the main body of the probe holder until it is at the desired angle *(Fig. 128)*.
4. Tighten the longitudinal adjustment screw *(Fig. 128)*.

To return the longitudinal adjustment to neutral (90°). Line up the longitudinal adjustment indicator markers *(Fig. 129)*.

5.8.2.5 Probe Holder Left/Right Conversion

To reverse the probe holder, follow these steps:

NOTE: To perform this operation the 1.5 mm hex wrench (Fig. 40) is required.

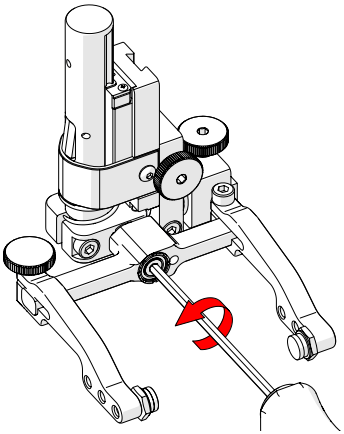

Fig. 130 - Unscrew yoke pivot screw

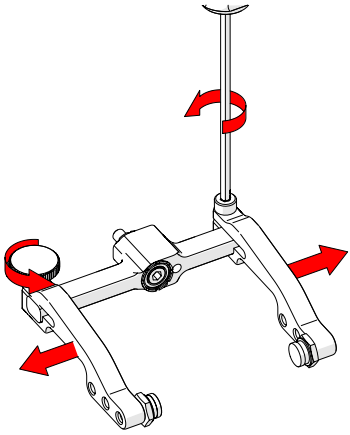

Fig. 131 - Remove probe holder arms

1. Ensure the probe holder is in latched, upper position *(Fig. 120)*.
2. Using the supplied 3 mm hex driver *(Fig. 37)*, unscrew the yoke pivot screw and remove yoke *(Fig. 130)*.
3. Loosen the probe holder arm adjustment knob and the arm clamp screw. Slide the probe holder arms off the yoke *(Fig. 131)*.

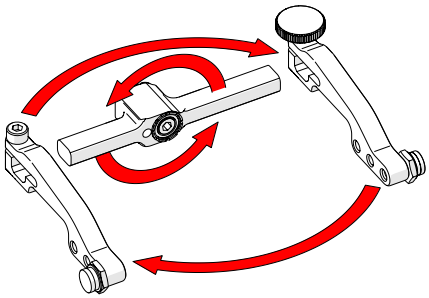

Fig. 132 - Flip yoke and reverse arms

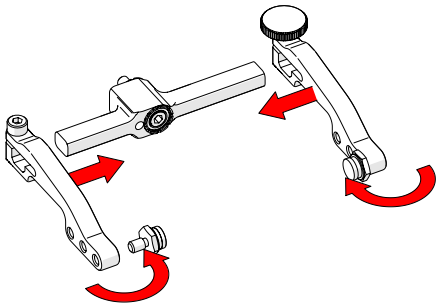

Fig. 133 - Attach arms & move buttons

4. Flip the yoke 180° and reverse the probe holder arms *(Fig. 132)*.
5. Place the pivot buttons on the inside of the probe holder arms *(Fig. 133)* using a 3/8 in wrench *(Fig. 38)*.

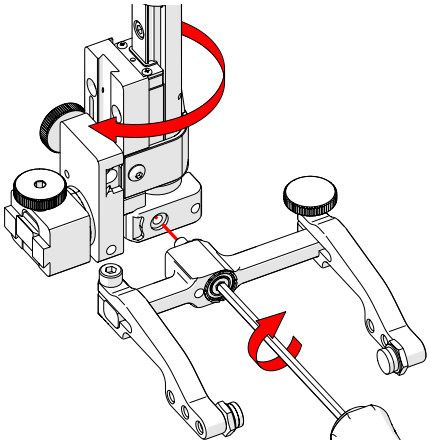

Fig. 134 - Screw yoke to opposite side

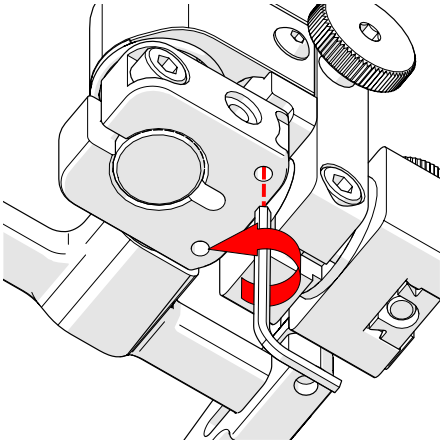

Fig. 135 - Lower 90° stop post

6. Mount the yoke to the opposite side of the base using the supplied 3 mm hex driver *(Fig. 134)*.

> *TIP: Keep the yoke level with the base as to ensure no conflicts with the plunger/set screw attached to the yoke.*

7. Locate the recessed M3 screw on the bottom of the probe holder. Unscrew the stop post using a 1.5 mm hex wrench *(Fig. 40)* until it has cleared all obstructions. Do not remove stop post *(Fig. 135)*.

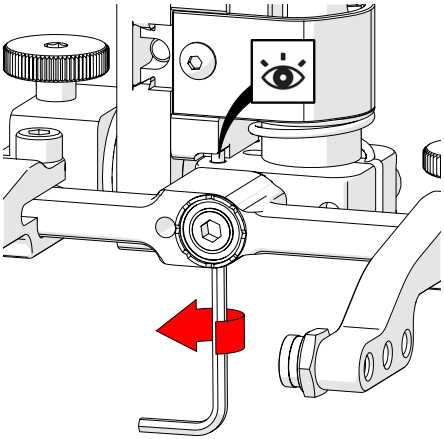

Fig. 136 - Raise opposite 90° stop post

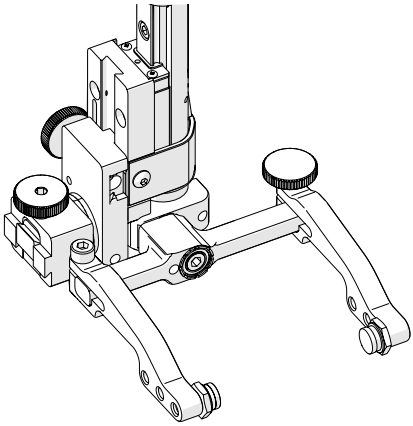

Fig. 137 - Reversed probe holder

8. Raise the stop post on the opposite side until the side of the post clearly contacts the 90° stop point on the probe holder's base *(Fig. 136)*.

5.8.3. Slip Joint Probe Holder

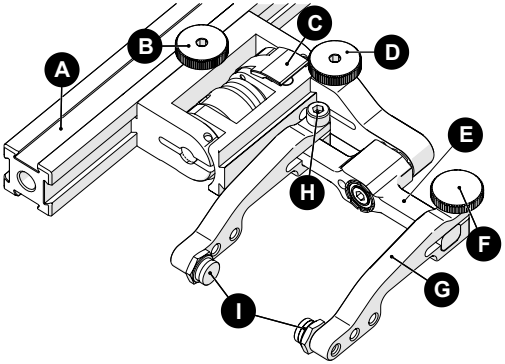

Fig. 138 - Slip Joint Probe Holder

A	Frame Bar
B	Probe Holder Adjustment Knob
C	Latch
D	Swing Arm Knob
E	Yoke
F	Probe Holder Arm Adjustment Knob
G	Probe Holder Arm
H	Arm Clamp Screw
I	Pivot Buttons

5.8.3.1 Probe Holder Setup

To mount a UT wedge in the probe holder, follow these steps:

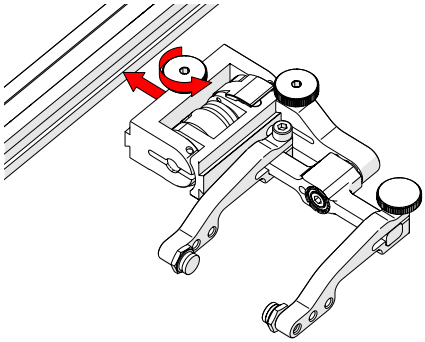

Fig. 139 - Attach to frame bar

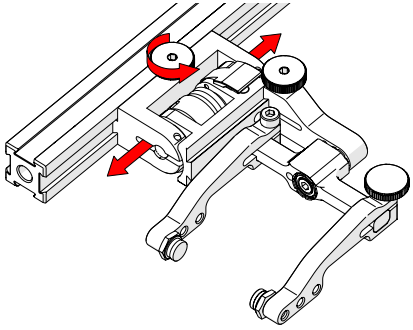

Fig. 140 - Adjust on frame bar

1. Rotate the probe holder adjustment knob and attach probe holder to a frame bar *(Fig. 139)*.
2. Use the probe holder adjustment knob to position the probe holder along the frame bar *(Fig. 140)*.

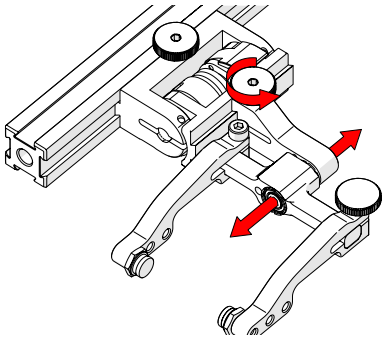

Fig. 141 - Adjust swing arm

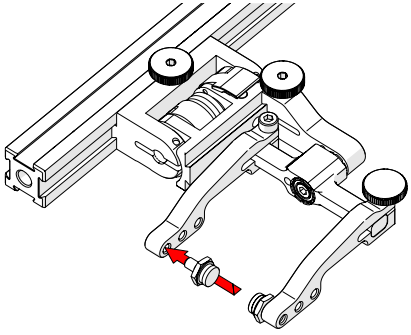

Fig. 142 - Place pivot buttons

3. Use swing arm knob to position the swing arm *(Fig. 141)*.

> *TIP: The swing arm is typically used to adjust TOFD center to center distance relative to the phased array probes on a four probe configuration.*

4. Using the supplied 3/8 in wrench, place the pivot buttons *(Fig. 142)* farthest from the yoke for maximum wedge clearance.

> *TIP: If narrow scanning footprint is required, use pivot button holes closest to the yoke. Wedge pivoting may be impeded when closer to the yoke.*

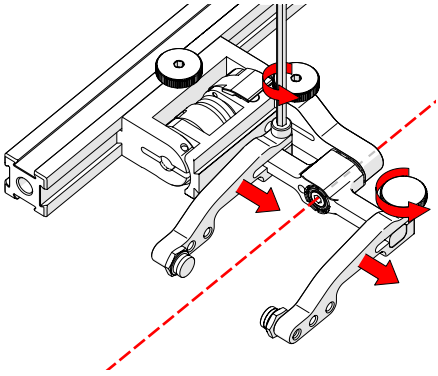

Fig. 143 - Adjust probe holder arms

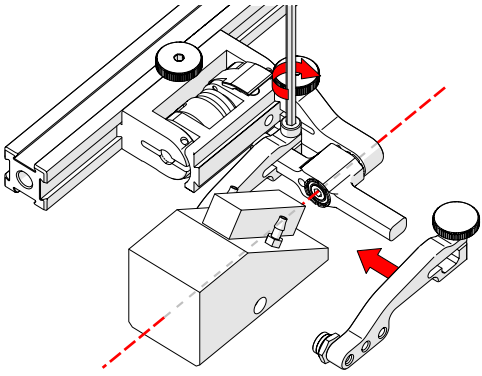

Fig. 144 - Place wedge

5. Loosen the probe holder arm adjustment knob *(Fig. 143)* and remove outer probe holder arm from yoke.
6. Adjust inner probe holder arm as required to best centre the probe on the yoke's pivot axis *(Fig. 143)*.

> *TIP: The probe holder yoke can accommodate many different probe and wedge sizes of varying widths. It is best to centre the wedge with the yoke's pivot axis to reduce wedge tipping when scanning. Position the inner probe holder arm accordingly with the centre of the yoke (Fig. 143).*

7. Position the wedge on the inner probe holder arm *(Fig. 144)*.
8. Slide outer probe holder arm along the yoke pinching the wedge in place.
9. Tighten probe holder arm adjustment knob *(Fig. 145)*.

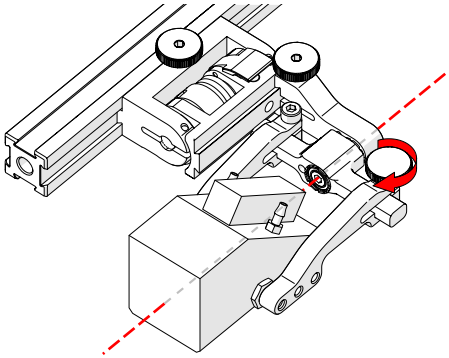

Fig. 145 - Pinch wedge with arm

5.8.3.2 Probe Holder Adjustment

To adjust the probe holder, follow these steps:

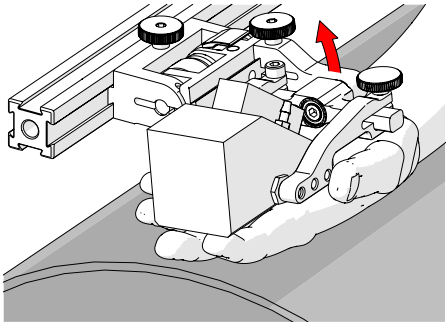

Fig. 146 - Lift to latched position

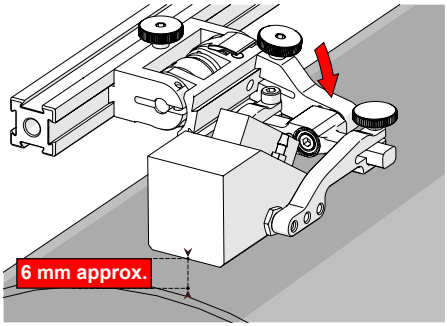

Fig. 147 - Lower to scanning surface

1. Ensure probe holder is in latched, upper position *(Fig. 146)*. If the probe holder is already latched, it will only move within the slip joint adjustment range and have no spring tension.
2. Push the probe holder yoke down toward inspection surface until the wedge is approximately 6 mm *(¼ in)* above the inspection surface *(Fig. 147)*.

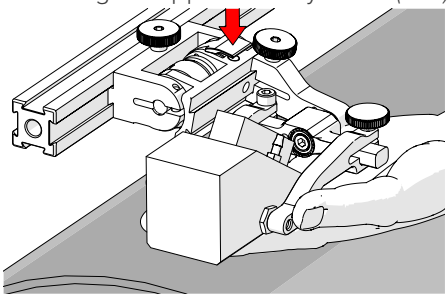

Fig. 148 - Lift and press latch button

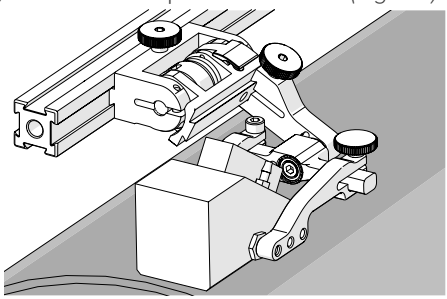

Fig. 149 - Spring loaded scan position

3. Lift probe slightly and press latch button *(Fig. 148)* to apply spring pressure to the wedge.
4. Gently lower probe holder and wedge to the scanning surface *(Fig. 149)*.

5.8.3.3 Probe Holder Force Adjustment

It is possible to adjust the tension of the probe holder spring.

> *NOTE: To perform this operation the 2 mm hex wrench (Fig. 41) and 3 mm hex wrench (Fig. 37) is required.*

Light	1 kg	2 lb
Medium	2 kg	4 lb
Heavy	3 kg	6 lb

When configured correctly, these settings exert the indicated spring force on the Probe.

To adjust the probe holder's force, follow these steps:

> *NOTE: Do not perform this operation on scanning surface.*

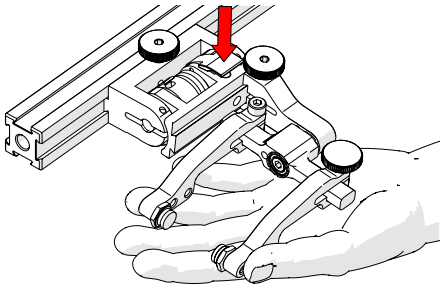

Fig. 150 - Lift slightly and press Latch

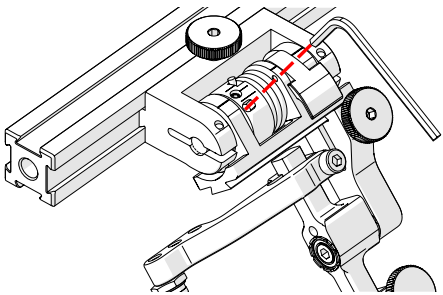

Fig. 151 - Unlatched position

1. Ensure the probe holder is in the upright latched position *(Fig. 146)*.
2. Lift probe holder slightly and press the latch button *(Fig. 150)* to release the probe holder the full 45° degrees.
3. Insert the short arm of a 3 mm hex wrench into the 3 mm slot *(Fig. 151)*.

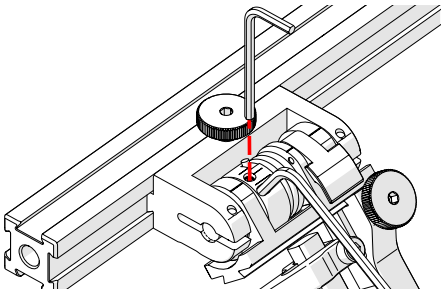

Fig. 152 - Insert hex tools

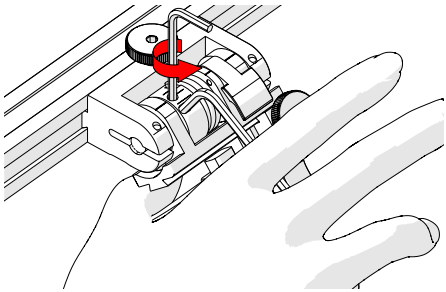

Fig. 153 - Press 3 mm hex wrench down

4. Place the 2 mm hex wrench into the force adjustment screw *(Fig. 152)*.
5. Lightly press the long arm of the 3 mm hex wrench down. Using the 2 mm hex wrench, loosen the force adjustment screw but do not remove it *(Fig. 153)*.
6. Gently apply pressure on the long leg of the 3 mm hex wrench until the force adjustment marker lines up with the desired spring tension. While keeping the markers in line, tighten the force adjustment screw.

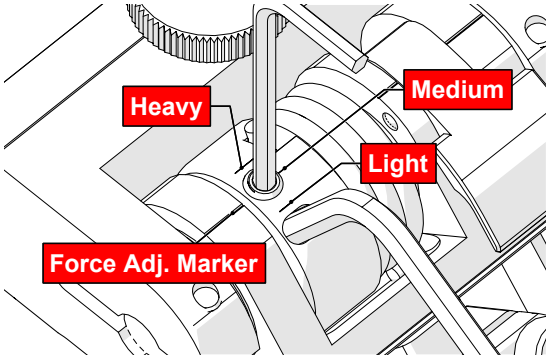

Fig. 154 - Choose desired tension

5.8.3.4 Slip Joint Probe Holder Left/Right Conversion

To reverse the probe holder, follow these steps:

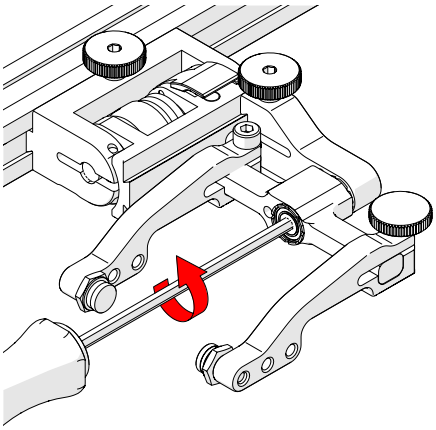

Fig. 155 - Unscrew yoke pivot screw

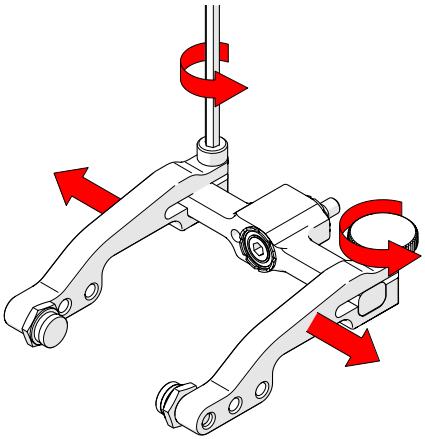

Fig. 156 - Remove arms

1. Unscrew the yoke from the swing arm *(Fig. 155)*.
2. Loosen the probe holder arm adjustment knob and arm clamp screw. Slide the arms from the yoke *(Fig. 156)*.

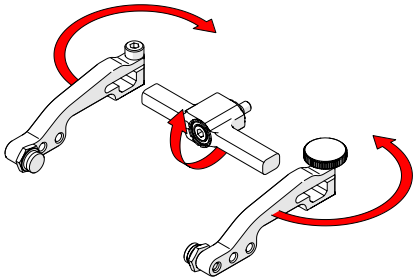

Fig. 157 - Flip yoke and reverse arms

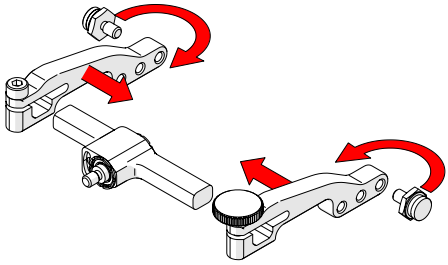

Fig. 158 - Attach arms and move buttons

3. Flip the yoke 180° and reverse the probe holder arms *(Fig. 157)*.
4. Place the pivot buttons on the inside of the probe holder arms *(Fig. 158)* using a 3/8 in wrench *(Fig. 38)*. Slide the arms onto the yoke and tighten the probe holder arm adjustment knob and the arm clamp screw.

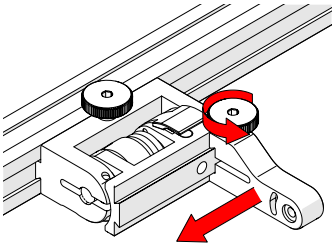

Fig. 159 - Position swing arm

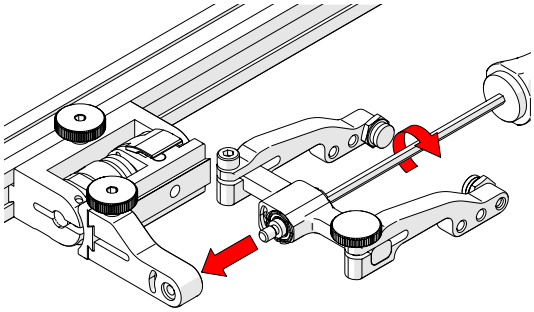

Fig. 160 - Install yoke to swing arm

5. Loosen the swing arm knob and slide the swing arm to the opposite end of the probe holder bracket *(Fig. 159)* or preferred position. Tighten swing arm knob.
6. Using the 3 mm hex driver, screw the yoke pivot screw into the opposite side of the probe holder swing arm *(Fig. 160)*. Ensure the yoke is level to avoid issues with the plunger/set screw.

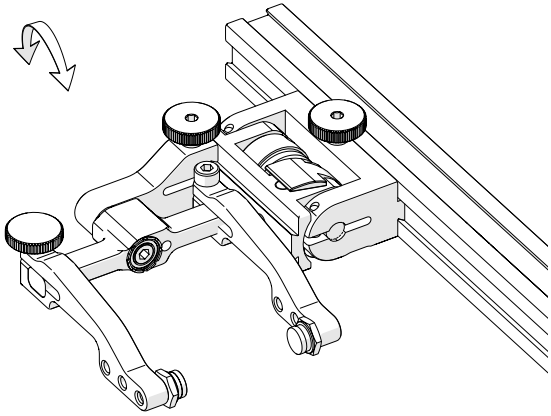

Fig. 161 - Reversed probe holder

5.9. Probe Holder Frames

5.9.1. Low Profile Probe Holder Frame - Flat or Circumferential Only

WARNING! FALLING OBJECT HAZARD.
It is imperative that the steps below be followed to properly set the height of the probe holder frame. If the height of the probe holder frame is set too low, the crawler may fall and **SEVERE INJURY** or **DEATH** could result.

The low profile frame adds weld scanning capability to the SKOOT HT motorized scanner. This frame can utilize *(4)* slip joint probe holders *(2 Phased Array and 2 TOFD, typically)*. The low profile design of this frame allows for scanning on diameters where radial clearance is limited.

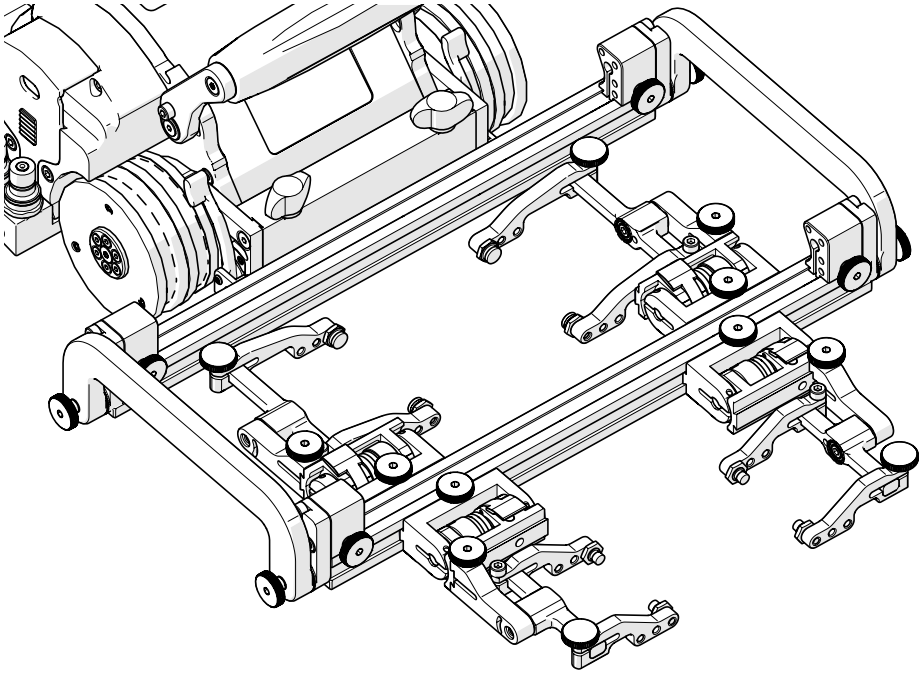

Fig. 162 - Low profile probe holder frame

1. Attach the wedges to the probe holders that are to be used *(see Probe Holder Setup on page 61 for additional details)*.

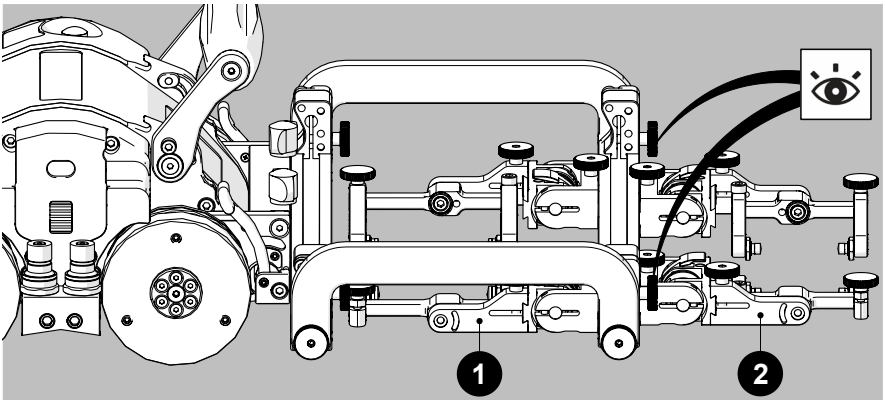

Fig. 163 - Position primary and secondary probe holders

2. Affix the probe holders (with attached wedges) to the low profile probe holder frame. On the frame bar, place the secondary probe holders at the front *(Fig. 163-2)* and the primary probe holders at the rear *(Fig. 163-1)*.

> *TIP: Due to their larger size, scan results are generally improved when pulling or dragging phased array wedges.*

3. Mount the low profile probe holder frame to the crawler *(see Cable Retainer on page 48 for additional details)*. When mounting the low profile frame, ensure the attachment knobs *(Fig. 163)* are at the front (non crawler side).

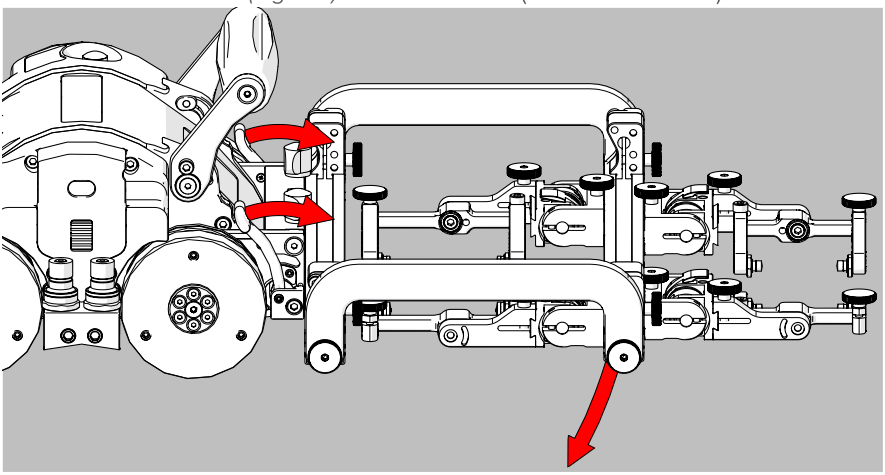

Fig. 164 - Align swivel mount with scan surface

4. Release the two swivel mount levers *(Fig. 164)* to position the swivel mount parallel to the scan surface *(Fig. 165)*. When alignment with scan surface is achieved, lock the crawler swivel mount levers.

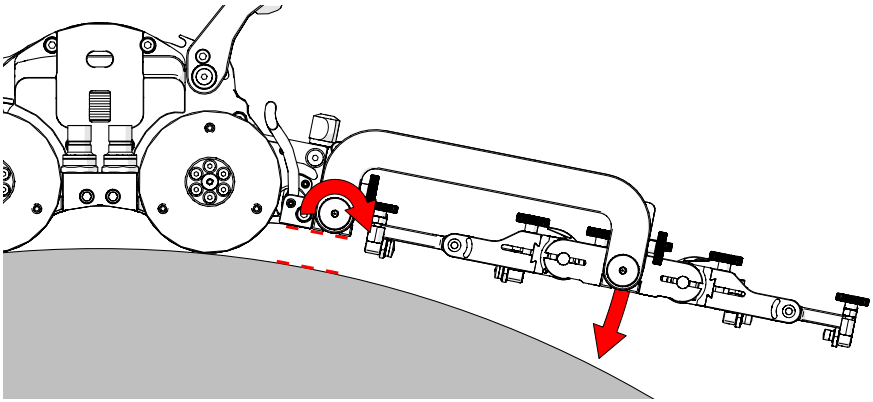

Fig. 165 - Set rear rotational adjustment knob

5. Loosen the rear rotational adjustment knob to lower the front frame bar of the low profile frame towards the inspection surface *(Fig. 165)*.

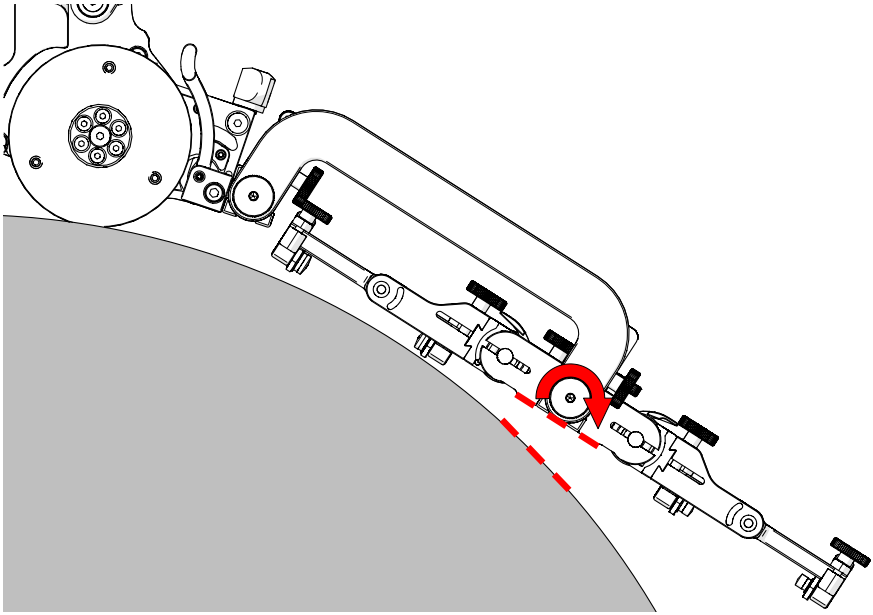

Fig. 166 - Align probe holder tangent with scan surface

6. Loosen the front rotational adjustment knob *(Fig. 166)* to align the frame bar parallel with the scan surface *(Fig. 167)*.

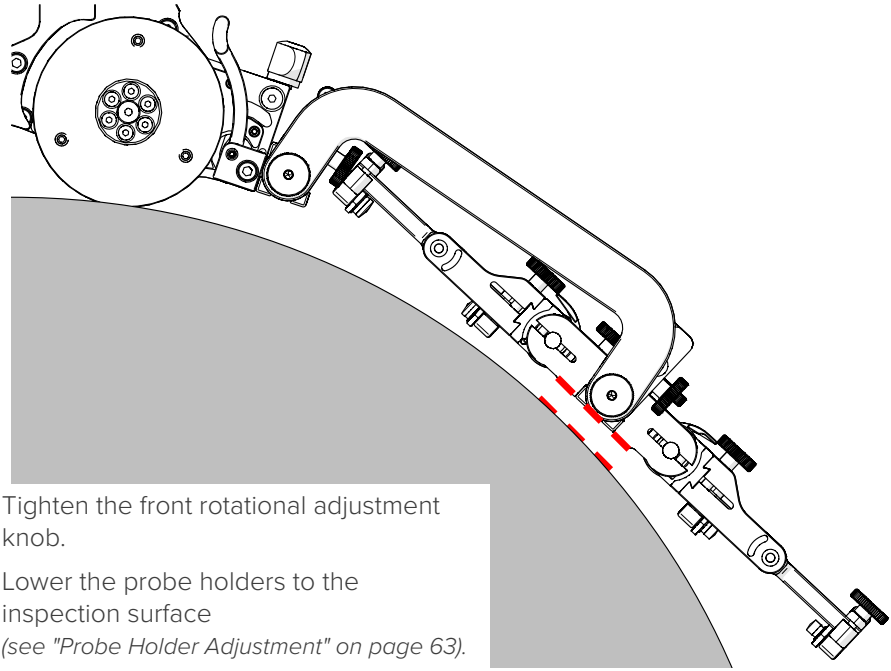

7. Tighten the front rotational adjustment knob.
8. Lower the probe holders to the inspection surface
   (see "Probe Holder Adjustment" on page 63).

Fig. 167 - Low profile probe holder frame

5.9.2. Vertical Probe Holder Frame - Flat or Circumferential Only

WARNING! FALLING OBJECT HAZARD.
It is imperative that the steps below be followed to properly set the height of the probe holder frame. If the height of the probe holder frame is set too low, the crawler may fall and **SEVERE INJURY** or **DEATH** could result.

The vertical probe holder frame adds weld scanning capability to the SKOOT HT motorized scanner. This frame uses (4) vertical probe holders. Additional frame components allow up to six probes to be used
(contact Jireh Industries Ltd. on page 1).

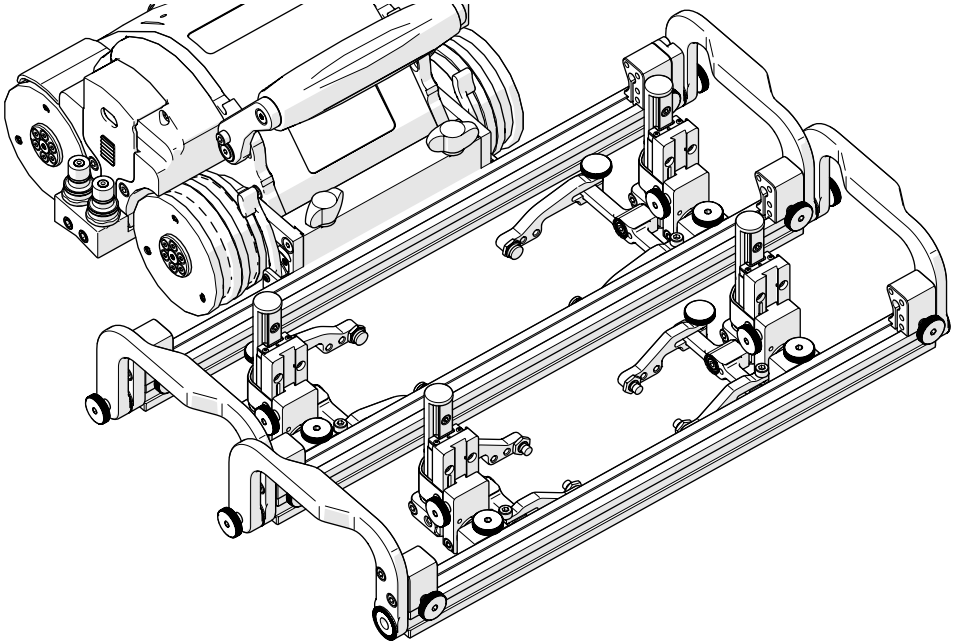

Fig. 168 - Vertical probe holder frame

1. Attach the wedges to the probe holders that will be used *(see Probe Holder Setup on page 55 for additional details).*

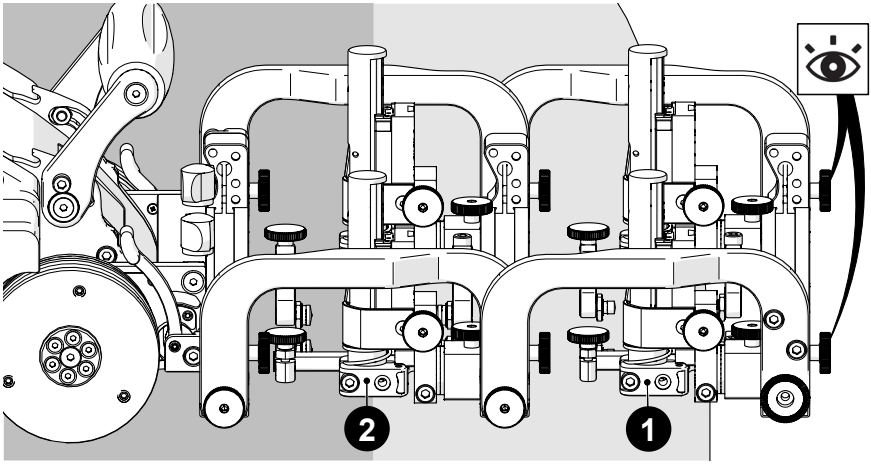

Fig. 169 - Position primary and secondary probe holders

2. Affix the probe holders *(with attached wedges)* to the probe holder frame. Place the secondary probe holder at the front of the frame *(Fig. 169-1)* and place the primary probe holders at the rear of the frame bar *(Fig. 169-2)*.

> *TIP: Due to their larger size, scan results are generally improved when pulling or dragging phased array wedges.*

3. Mount the probe holder frame to the crawler *(see Cable Retainer on page 48 for additional details)*. When mounting the probe holder frame, ensure the attachment knobs *(Fig. 170)* are at the front *(non crawler side)*.

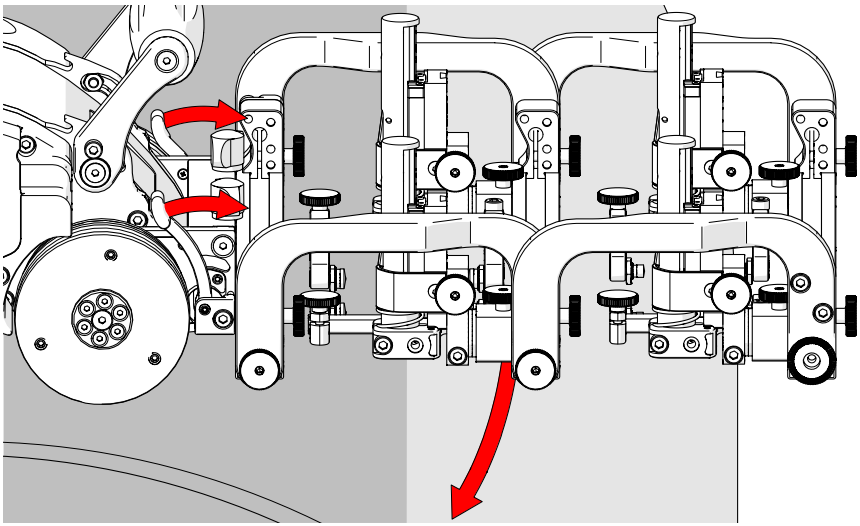

Fig. 170 - Align swivel mount with scan surface

4. Release the two swivel mount levers *(Fig. 170)* to position the swivel mount parallel to the scan surface *(Fig. 171)*. When alignment with scan surface is achieved, lock the crawler swivel mount levers.

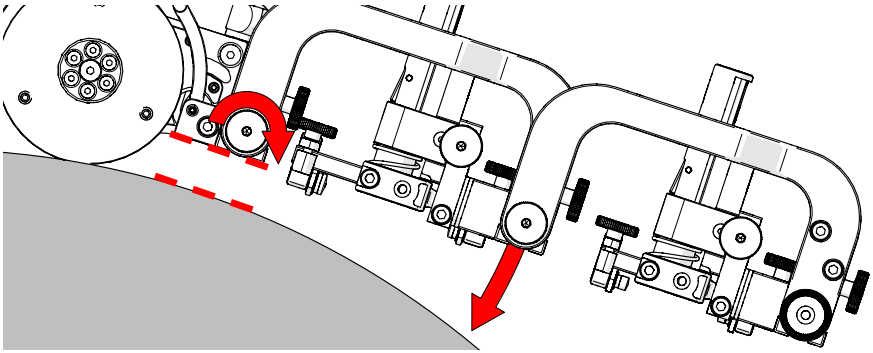

Fig. 171 - Set rear rotational adjustment knob

5. Loosen the rear rotational adjustment knob to lower the weld scan frame towards the inspection surface *(Fig. 171)*.

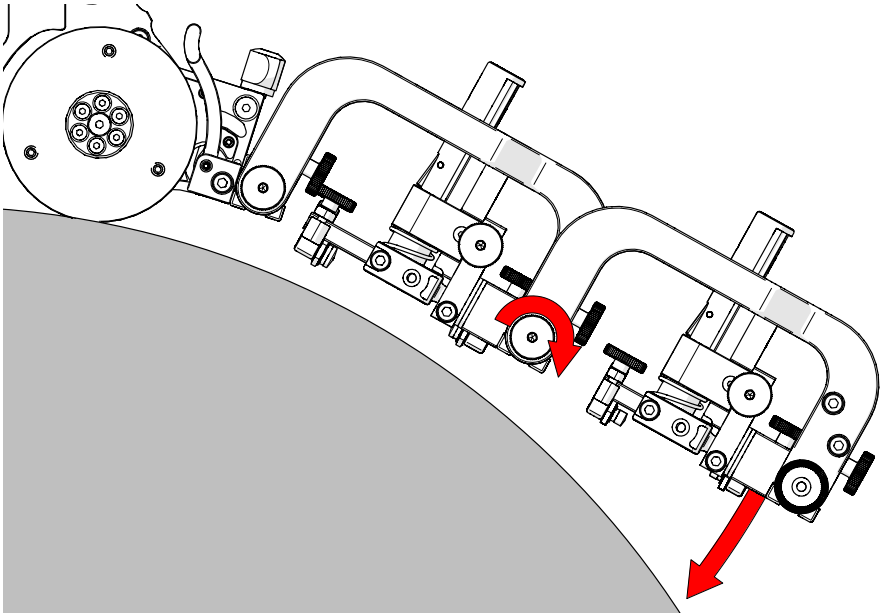

Fig. 172 - Set front rotational adjustment knob

6. Loosen the front rotational adjustment knob *(Fig. 172)* to align the TOFD probe holders parallel with the scan surface *(Fig. 173)*.

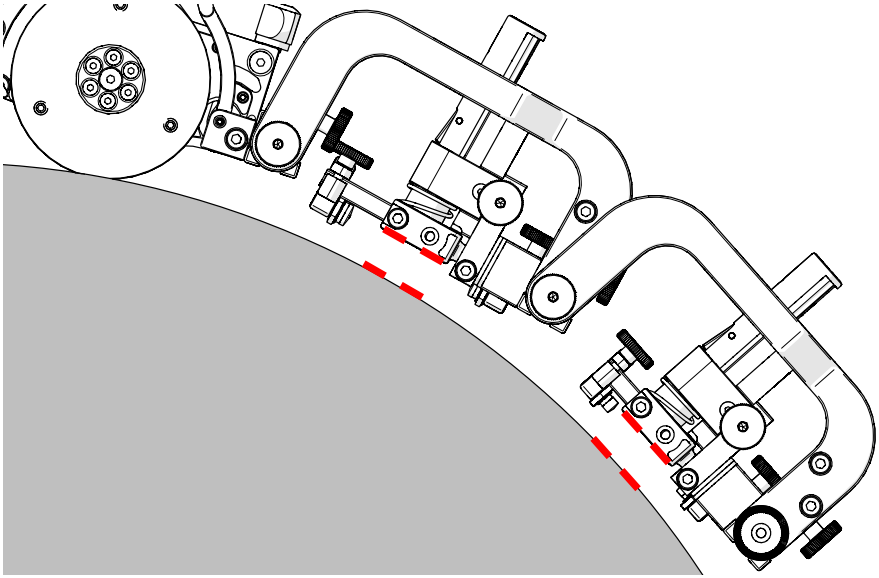

Fig. 173 - Align probes with the scan surface tangent

7. Lower probe holders to the inspection surface *(see Probe Holder Vertical Adjustment on page 56 for additional details).*

5.9.3. Pivoting Probe Holder Frame

WARNING! FALLING OBJECT HAZARD.
It is imperative that the steps below be followed to properly set the height of the probe holder frame. If the height of the probe holder frame is set too low, the crawler may fall and **SEVERE INJURY** or **DEATH** could result.

The pivoting probe holder frame utilizes vertical probe holders. The SKOOT HT can guide as many as 6 probes in the longitudinal direction.

NOTE: A minimum OD of 762 mm (30 in) is required for longitudinal scanning.

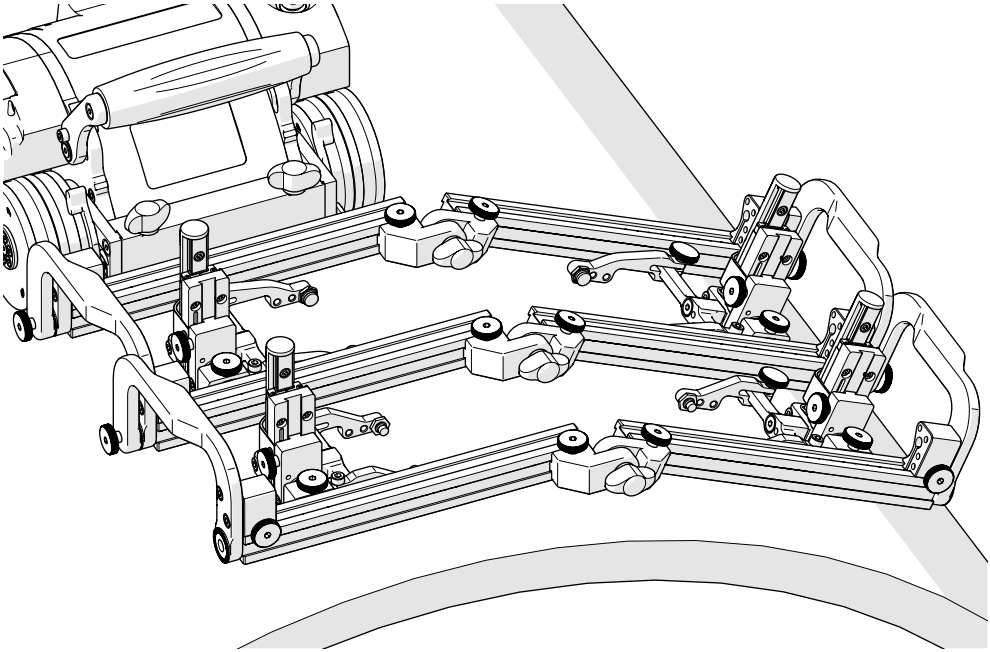

Fig. 174 - Pivoting Probe Holder Frame

5.9.3.1 Mounting a Pivoting Probe Holder Frame

1. If attached, use the 3 mm hex driver to remove the probe holder pivot mount from the pivoting probe holder frame.
2. Attach the wedges that are to be used with the probe holders *(see Probe Holder Setup on page 55 for additional details).*

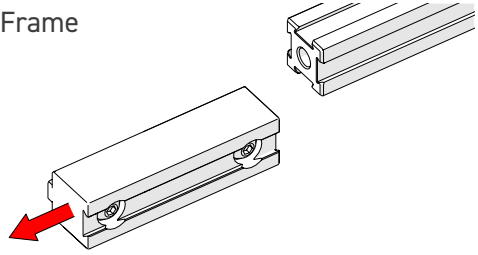

Fig. 175 - Remove probe holder pivot mount

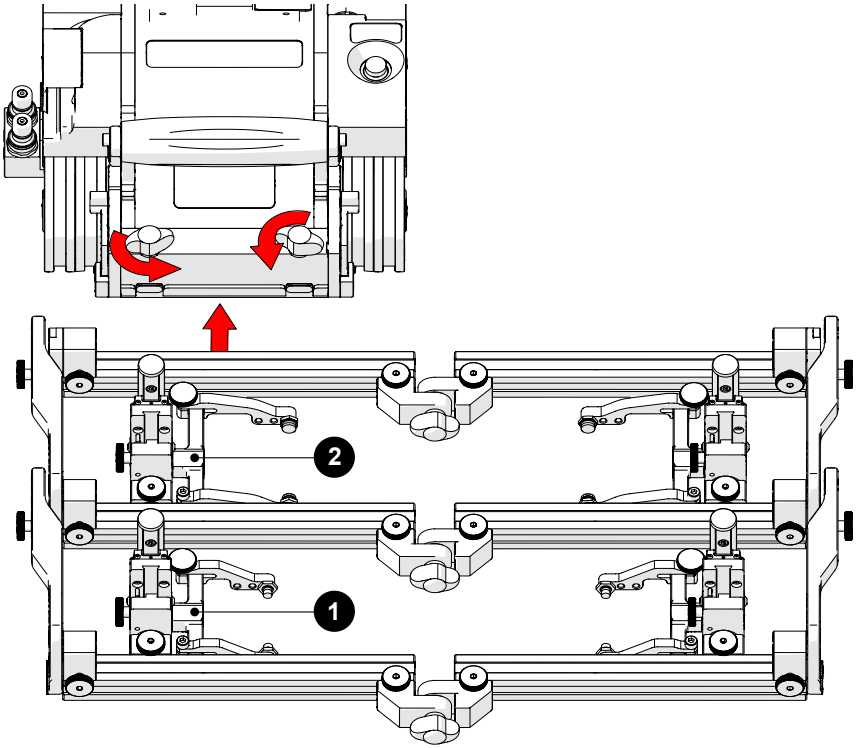

Fig. 176 - Connect frame to crawler's swivel mount

1. Affix the probe holders *(with attached wedges)* to the probe holder frame. Place the secondary probe holders at the front of the frame *(Fig. 176-1)* while placing the primary probe holders at the rear of the frame system *(Fig. 176-2).*

> *TIP: Phased array wedges are designed to be pulled along a scan surface.*

2. Mount the pivoting probe holder frame to the crawler *(see Swivel Mount on page 44 for additional details).*

5.9.4. Pivoting Probe Holder Frame Setup - Longitudinal Scanning

5.9.4.1 Longitudinal Scanning

To prepare the pivoting probe holder frame for longitudinal scanning, follow these steps:

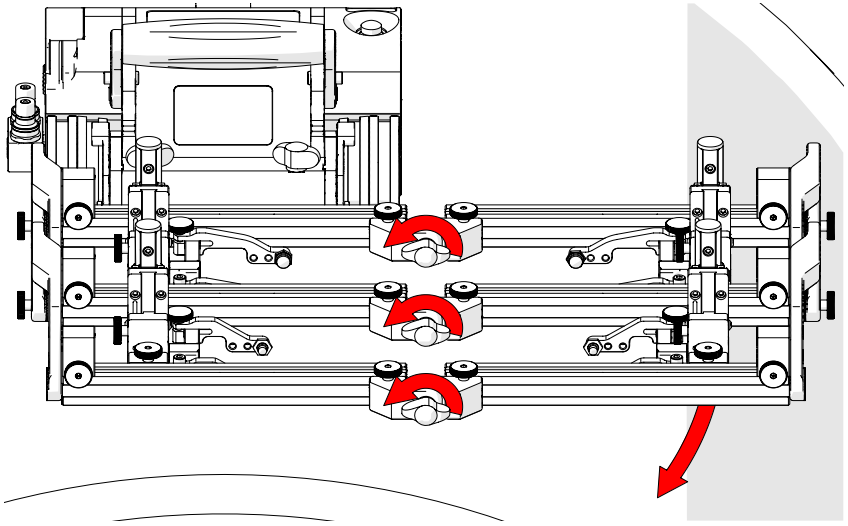

Fig. 177 - Loosen pivot wing knobs

> *NOTE: The swivel mount must be in a horizontal position during longitudinal scanning (see "Swivel Mount" on page 44).*

1. Loosen the pivot wing knobs at the centre of the frame system *(Fig. 177)*. Lower the left side of the frame system to align with the tangent of the scan surface. Tighten the pivot wing knobs.

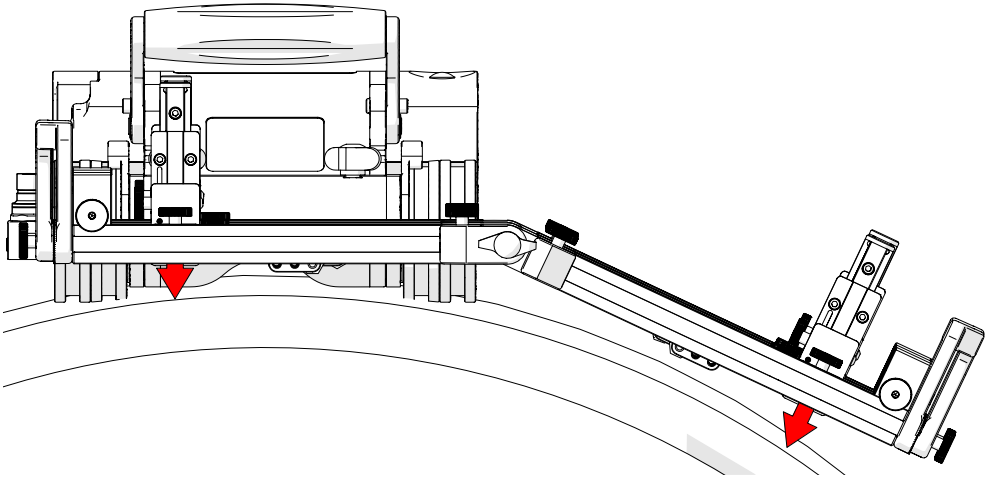

Fig. 178 - Tighten pivot wing knobs

2. Lower the vertical probe holders *(see "Probe Holder Vertical Adjustment" on page 56).*

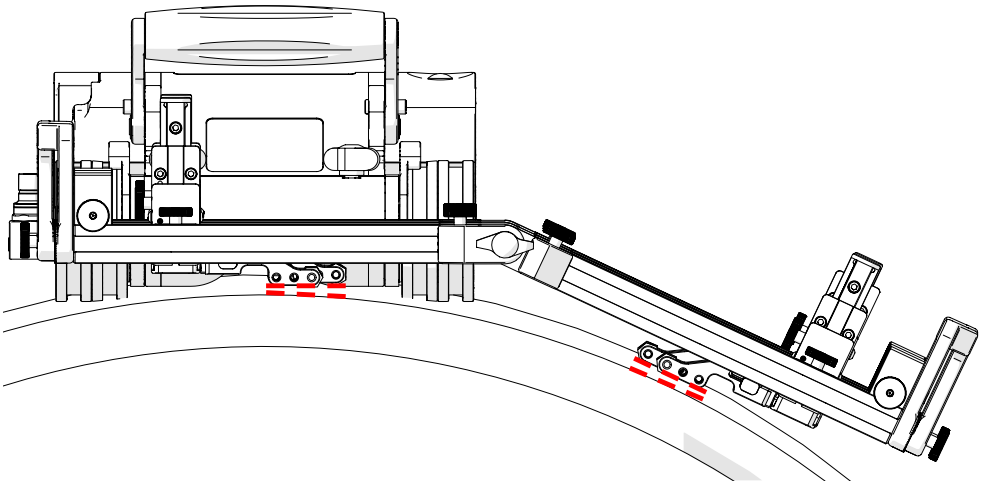

Fig. 179 - Correct probe holder longitudinal adjustment

3. Ensure probe holder arms are parallel to the scan surface *(see "Probe Holder Longitudinal Adjustment" on page 58).*

5.9.4.2 Circumferential Scanning

(see Vertical Probe Holder Frame - Flat or Circumferential Only on page 71 for additional details)

5.9.4.3 Pivoting Probe Holder Frame - Flange Scanning

> *NOTE: The optical guide pivot mount is not compatible with the following configuration.*

The pivoting probe holder frame may be configured to allow scanning of flanges and the like. The following steps explain setup of this configuration:

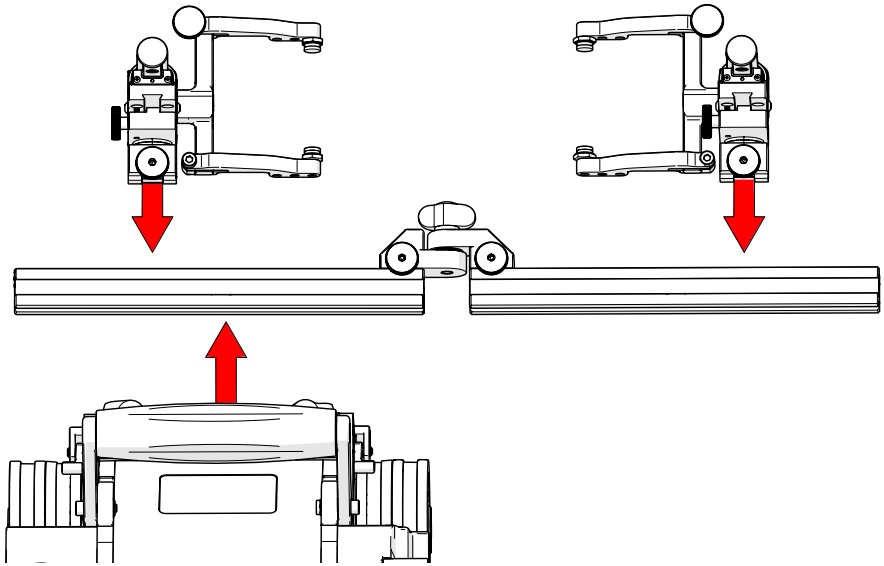

Fig. 180 - Configure assembly and mount to SKOOT HT

1. Disassemble the pivoting probe holder frame to achieve the setup shown *(Fig. 180)*. Ensure proper placement of the frame bar with attached mounting point in relation to the SKOOT HT.

> *TIP: When the scanning surface is circumferential, only one frame bar with two probes can be used.*

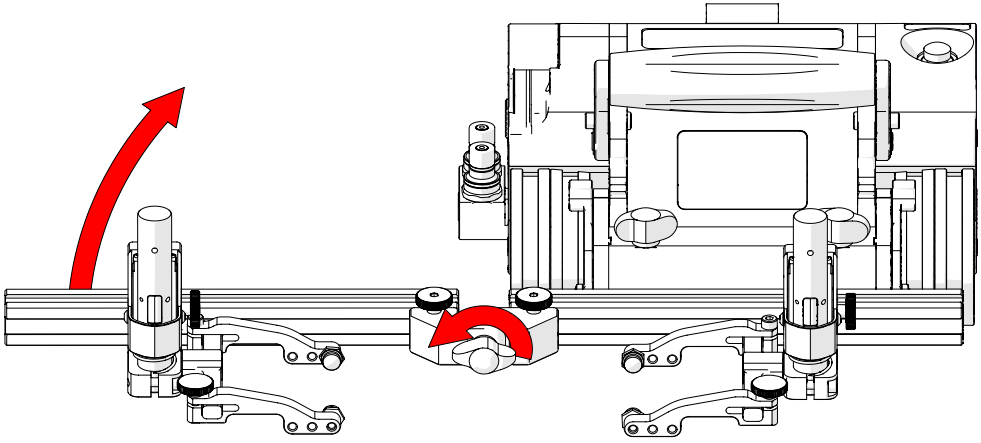

Fig. 181 - Lift frame bar to avoid interference

2. Loosen the pivot wing knob and raise the frame bar to an angle greater than the surface to be scanned *(Fig. 181)*. Tighten the pivot wing knob and place crawler on scan surface *(see "Placement of Crawler on Inspection Surface" on page 90)*
3. Release the front swivel mount adjustment levers to align the swivel mount parallel to the scan surface *(Fig. 182)*.

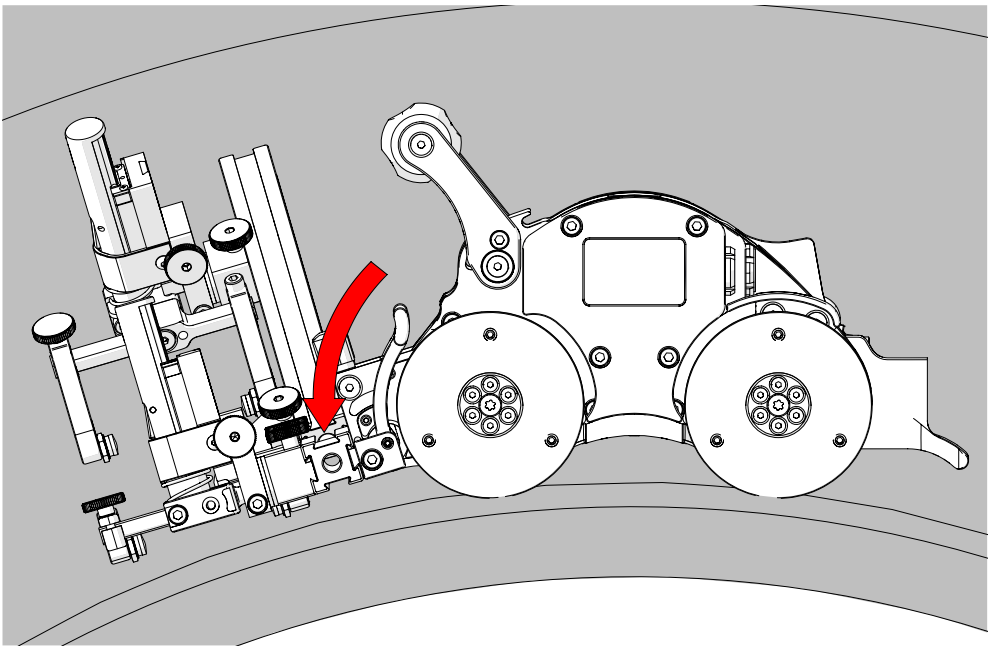

Fig. 182 - Align swivel mount with scan surface

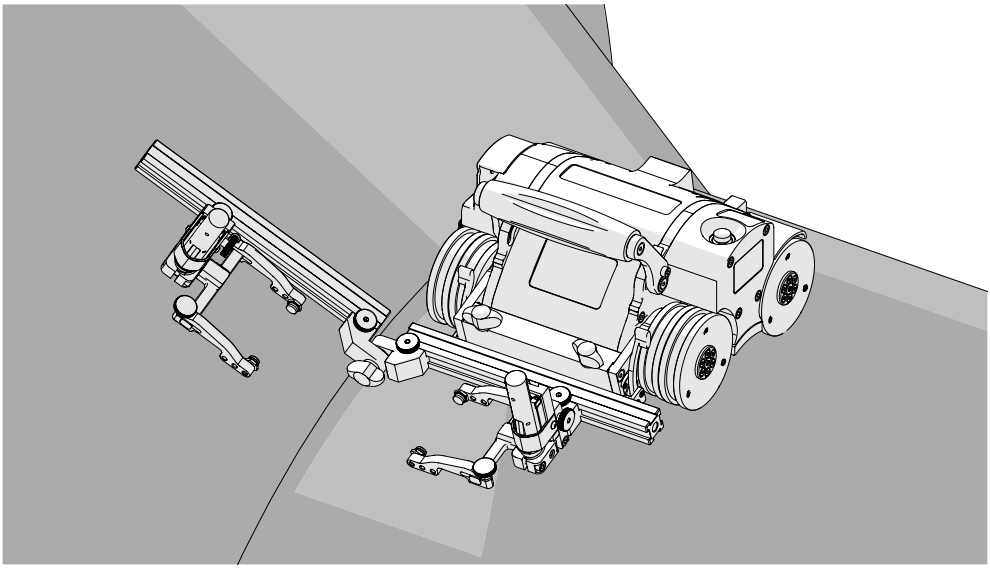

Fig. 183 - Align frame bar with flange scan surface

4. Loosen the pivot wing knob and align the frame bar parallel with the scan surface *(Fig. 183)*.

5.9.5. Battery Powered Optical Guide Pivot Mount

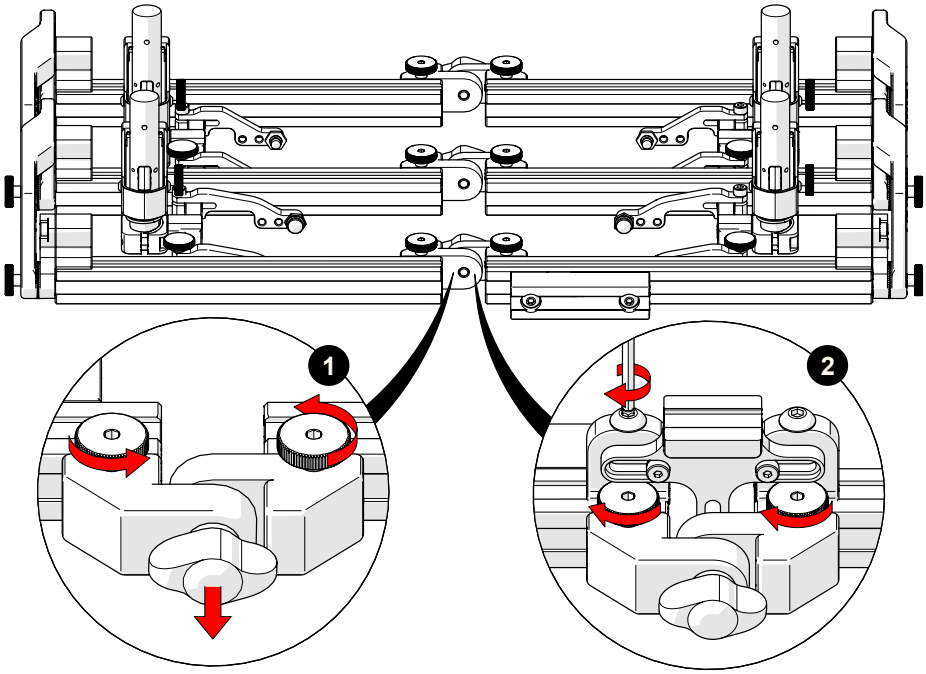

Fig. 184 - Battery powered optical guide pivot mount installation

An optional mounting point for any optical guide is available.

► *(see "Battery Powered Optical Guide" on page 87)*

To install the pivot mount, see these following instructions:

1. Remove the dovetail bar pivot from one of the sets of frame bars *(Fig. 184-1)*. The choice of which dovetail bar pivot to remove is at the user's discretion.
2. Attach the optical guide pivot mount to the frame bars *(Fig. 184-2)*, tighten the dovetail knobs and the dovetail screws. Ensure a flush alignment of the pivot mount and the frame bars to achieve proper centering of the optical guide pivot mount.
3. Mount an optical guide following instructions *(see "Battery Powered Optical Guide" on page 87)*.

5.10. HT Cable and Hose Management

The HT Cable and Hose Management is offered in a variety of lengths and provides a means of bundling and protecting cables and hoses that connect to the scanner.

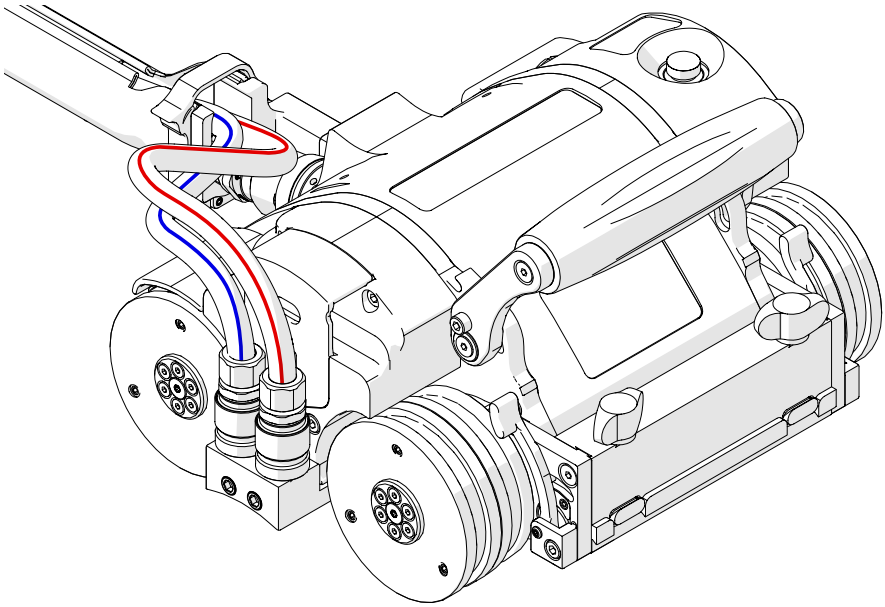

Fig. 185 - HT cable and hose management

5.10.1. Mounting the HT Cable Management

To attach HT cable management with threaded mount, follow these steps:

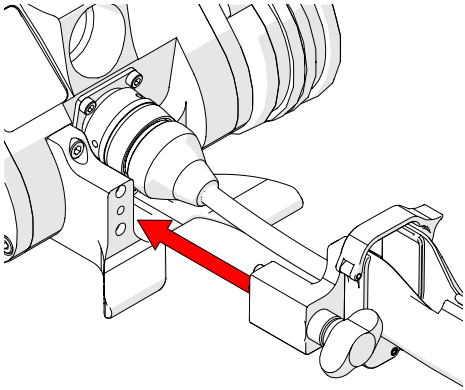

Fig. 186 - Align with umbilical

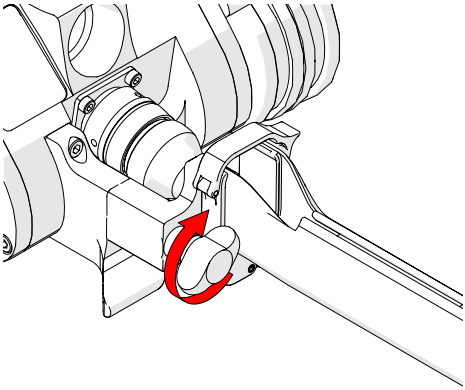

Fig. 187 - Tighten wing knob

1. Align the HT cable management clamp with the appropriate mounting position on the user umbilical breakout *(Fig. 186)*.

2. Tighten the HT cable management clamp wing knob *(Fig. 187)*.

5.10.2. Cable Management Setup

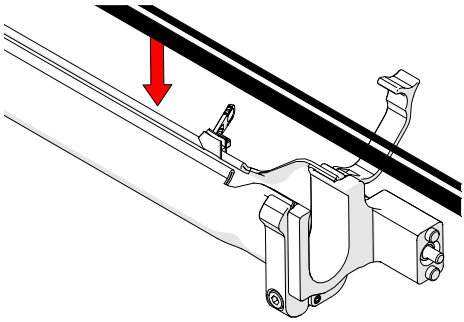

Fig. 188 - Insert cables and hoses

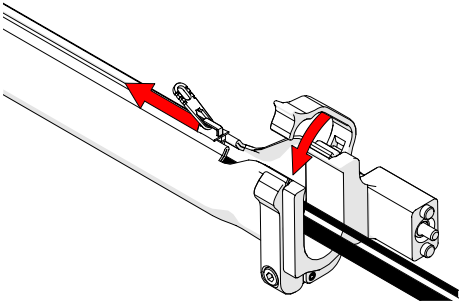

Fig. 189 - Zip to close

1. Open the HT cable management sleeving. Begin at the clamp end and start placing the cabling in the sleeving *(Fig. 188)*.
2. Follow the cable placement zipping the sleeving closed *(Fig. 189)*.

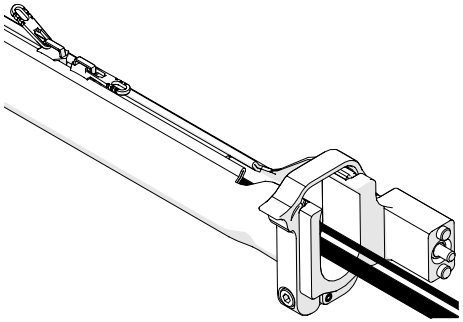

Fig. 190 - Zip opposite end

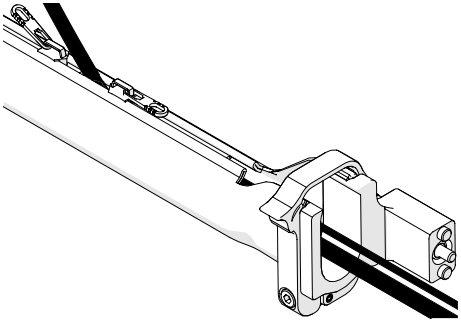

Fig. 191 - Flexible routing

3. Once the cable is placed the entire length of the sleeving, bring the zipper from the opposite end to meet at any point in the middle.
4. When necessary, the two zippers may be opened to allow any cables to be routed out of the sleeving.

5.10.3. Clamp Setup

In the event the sleeving becomes disconnected from the HT cable management clamp, follow these instructions to reattach the sleeving and clamp.

1. Loosen the clamp screw using the supplied 3 mm hex driver.
2. Slide the clamp around the sleeving first and then slide the sleeving around the outside of the HT cable management mount *(Fig. 192)*.
3. Align the zipper opening and the HT cable management clamp opening.
4. Slide the clamp over the tube and HT cable management mount pinching the tube in between *(Fig. 193)*.
5. Tighten the clamp screw *(Fig. 194)*.

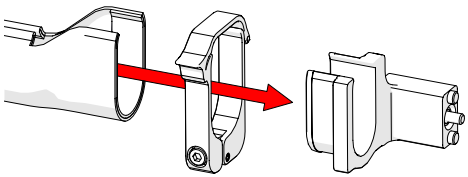

Fig. 192 - Slide tube around mount

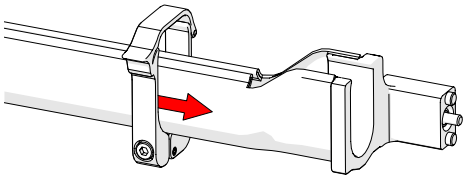

Fig. 193 - Slide clamp onto mount

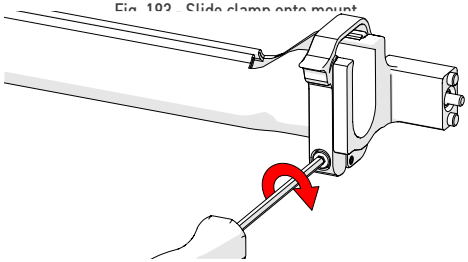

Fig. 194 - Tighten clamp screw

5.10.4. Hose Connection and Routing

The hoses carry coolant which dissipates heat in crawler and various components. The hoses **MUST** be routed though the HT cable management system.

The hoses are affixed with quick connects that do not drip or leak when connecting or disconnecting.

1. Press the hose fittings onto the quick connects of the crawler *(see "- Connect hoses to crawler" on page 85)*.

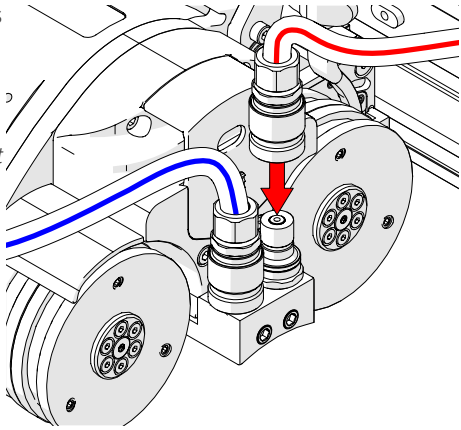

Fig. 195 - Connect hoses to crawler

2. Route the hoses through the HT cable management system and connect to the cooler *(Fig. 196)*.

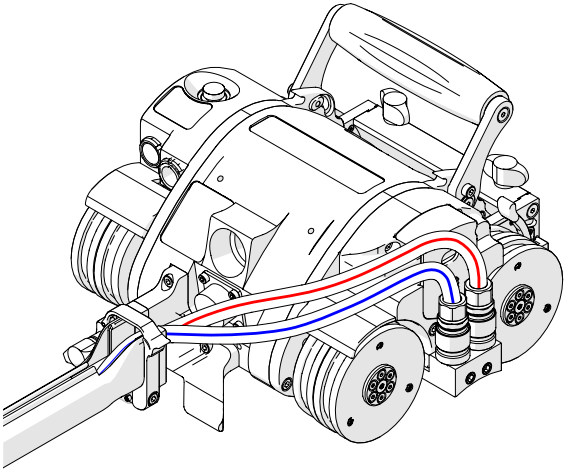

Fig. 196 - Hose routing to crawler

5.10.5. Disconnecting Hoses

1. To disconnect a hose, grasp the sleeve of the hose fitting and pull away from the crawler *(Fig. 197)*.

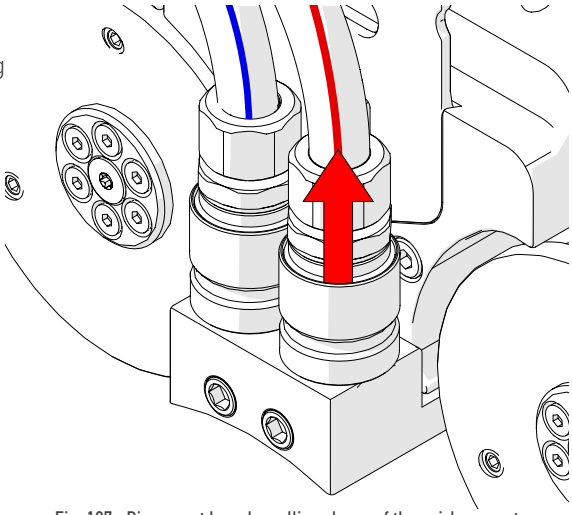

Fig. 197 - Disconnect hose by pulling sleeve of the quick connect

5.11. Accessories

5.11.1. Battery Powered Optical Guide

WARNING! LASER RADIATION. The battery powered optical guide contains a Class 1M laser. Do not view directly with optical instruments.

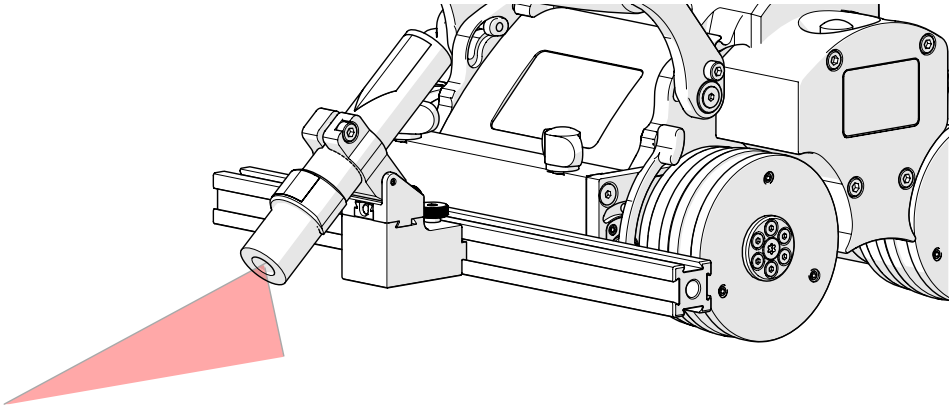

Fig. 198 - Battery powered optical guide

The battery powered optical guide provides a reference point useful for a aligning the SKOOT HT to a given path *(i.e. a weld)*.

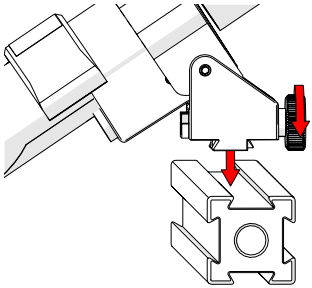

Fig. 199 - Mount on frame bar

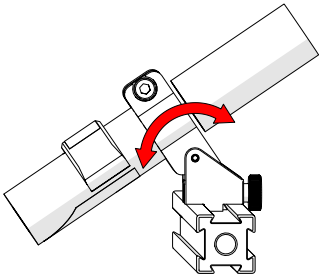

Fig. 200 - Aim guide

1. Loosen the battery powered optical guide knob and mount the guide to the frame bar *(Fig. 199)*.
2. Tighten the battery powered optical guide knob.
3. Adjust the guide's friction pivot to aim the guide as required *(Fig. 200)*.
4. Loosen the guide knob to adjust the side-to-side position as required.
5. The included perpendicular mount allows for alternate mounting positions when required.

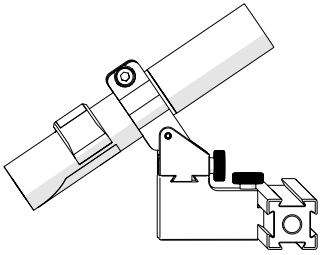

Fig. 201 - Perpendicular mount

NOTE: The battery powered optical guide requires 1 AA battery for operation.

6.1. System Startup

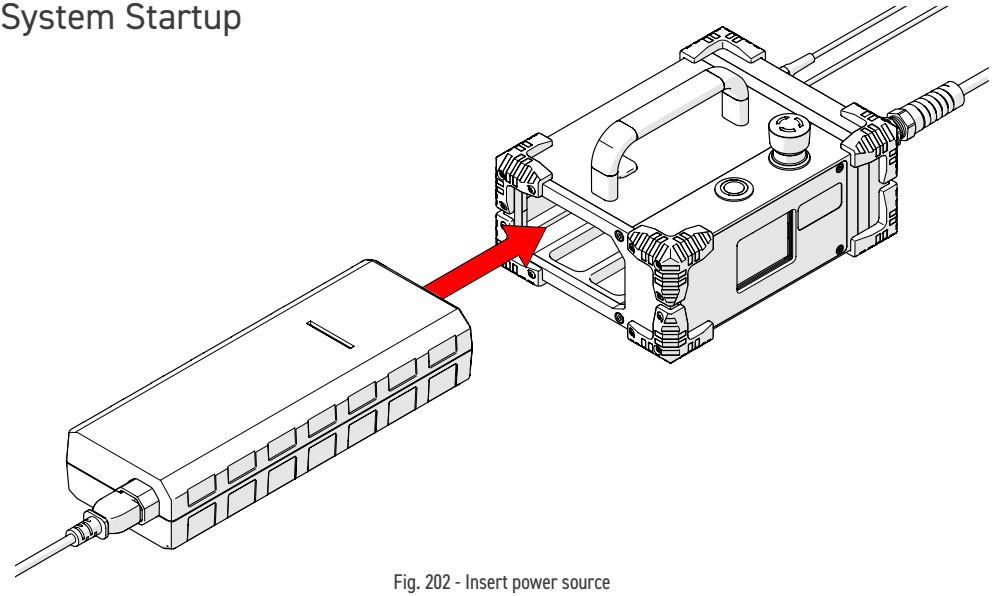

Fig. 202 - Insert power source

To activate the system, follow these steps:

1. Insert power source into power controller dock *(Fig. 202)*.
2. Connect the components *(see "Configurations" on page 35)*.

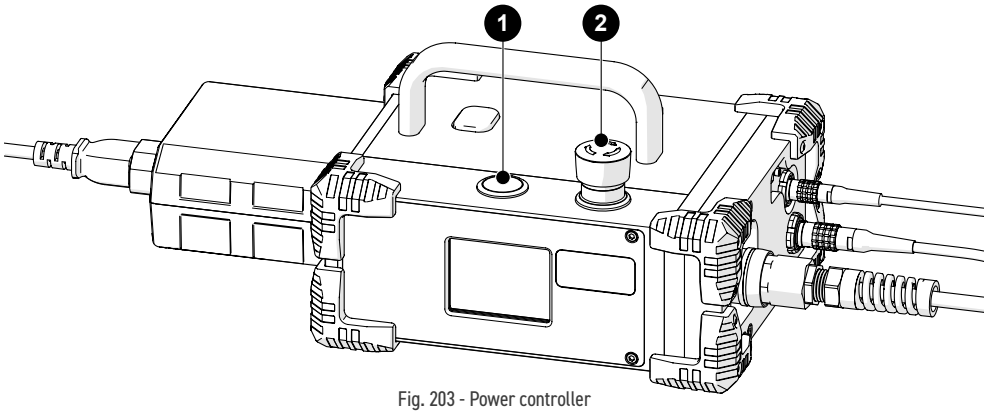

Fig. 203 - Power controller

3. Locate the 2 red emergency stop push-button on the power controller. Rotate this button clockwise to unlatch *(Fig. 203)*.
4. The 1 power button on the power controller activates the system *(Fig. 203)*.

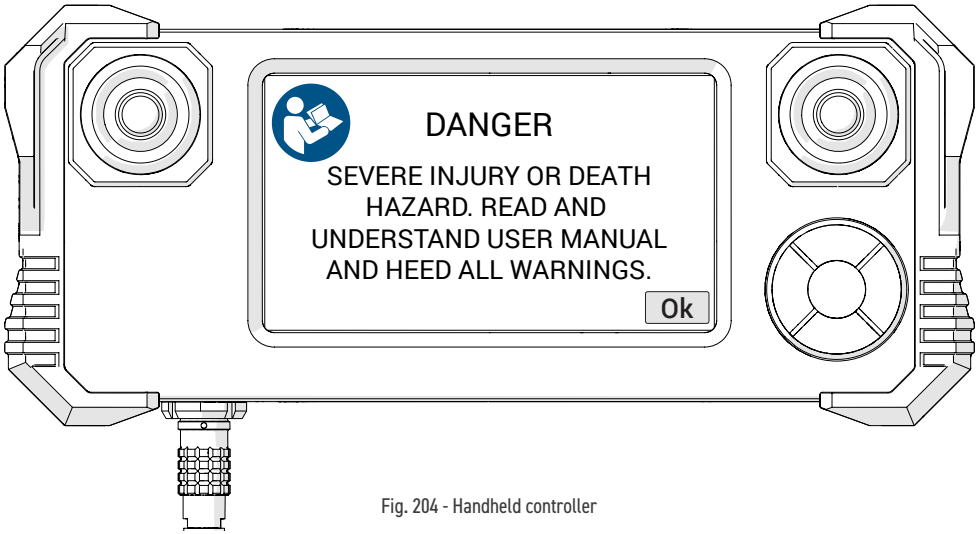

Fig. 204 - Handheld controller

5. A warning message will display on the handheld controller when power has been activated *(Fig. 204)*. Once the dangers of using the SKOOT HT are recognized and understood by reading this user manual, touch **Ok** to acknowledge the warning.

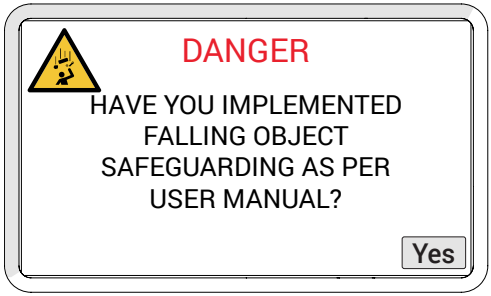

Fig. 205 - Falling object warning

6. A second warning message *(Fig. 205)* will display requesting assurance that a No Entry Fall Zone has been established *(see "No Entry Fall Zone" on page 31)* and tether requirements are met *(see "Tether Requirements and Attachment" on page 32)*. Acknowledge this warning by touching **Yes**.
7. Start the Cooler by referring to the separate Cooler user manual.

Once the system is initialized, the **Mode Select** screen will appear *(see "Jog Mode" on page 97)*. The system is now ready for operation.

6.2. Placement of Crawler on Inspection Surface

WARNING! HOT SURFACE. The **SKOOT HT** crawler may reach temperatures that may cause burns if contacted with bare skin. Wear heat resistant safety gloves when handling.

IMPORTANT! It is important to place the crawler on the inspection surface as instructed below to protect the electronic components within the crawler from damaging shock. The crawler should never be slammed directly onto the surface.

CAUTION! Do **NOT** handle crawler using the umbilical cable. Use the provided handles.

WARNING! MAGNETIC MATERIAL. The wheels of the crawler produce an extremely strong magnetic field which may cause failure or permanent damage to items such as watches, memory devices, CRT monitors, medical devices or other electronics.

Tools, magnets and metal objects can cut, pinch or entrap hands and fingers. **HANDLE WITH CARE**.

People with pacemakers or ICD's must stay at least 25 cm *(10 in)* away.

CAUTION! Ensure Cooler is properly connected and pumping coolant through the SKOOT HT system before placing the crawler on a hot surface, and remains pumping until after the crawler is removed from the hot surface. Failure to do so could result in rupture of the tubes due to overheating.

To place the crawler on the inspection surface, follow these steps:

1. Ensure crawler preparation is complete *(see "Preparation for Use" on page 31)* and system startup has been performed *(see "System Startup" on page 88)*.

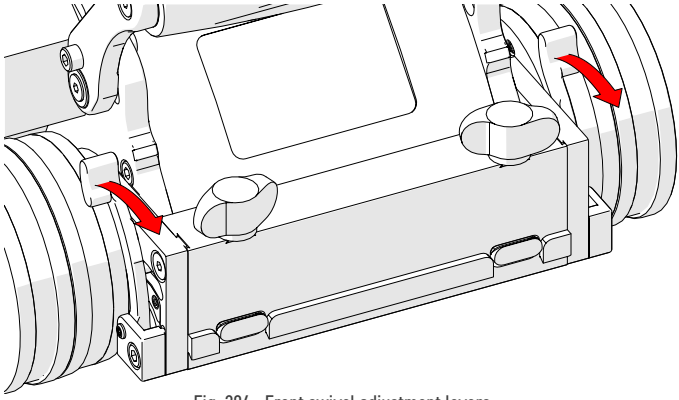

Fig. 206 - Front swivel adjustment levers

2. Release the front swivel adjustment levers *(Fig. 206),* located at the front of the crawler, to position the front swivel mount.
3. Raise the front swivel mount to ensure they will not hinder the wheels from contacting the inspection surface *(see "Swivel Mount" on page 44)*.

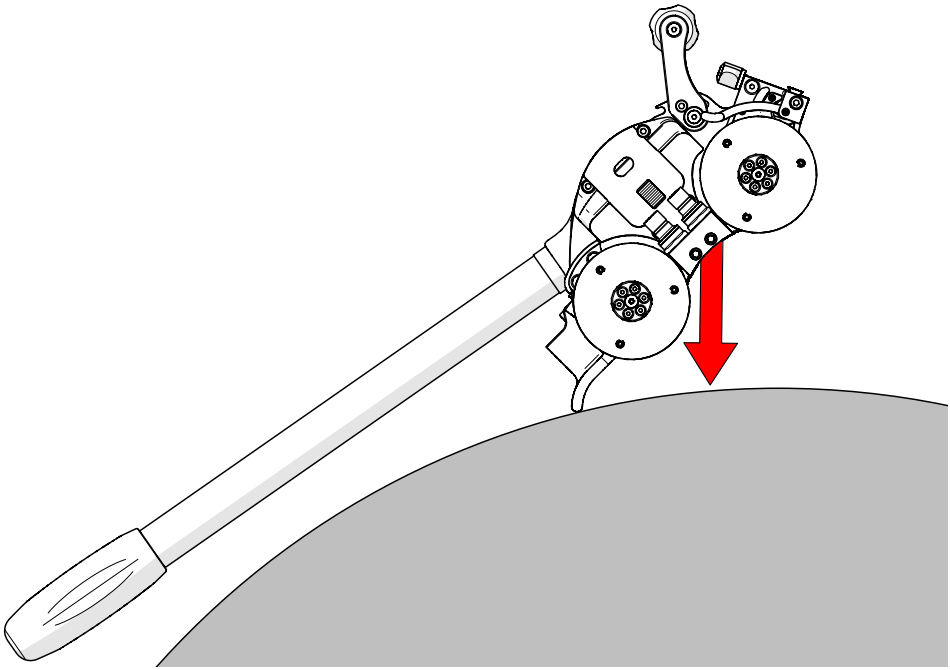

Fig. 207 - Lower crawler's pry point towards inspection surface

NOTE: Umbilical, accessories and hoses not included in illustration.

4. Ensure the manipulation handle is installed on the crawler.
5. Ensure the Cooler is running and pumping fluid to the crawler. Do NOT place a crawler on a heated surface unless the Cooler is running properly.
6. While firmly grasping the crawler handle with one hand, and the manipulation handle with the other, carefully lower the pry point of the crawler towards the inspection surface with the wheels of the crawler held as high off the surface as possible *(Fig. 207)*.

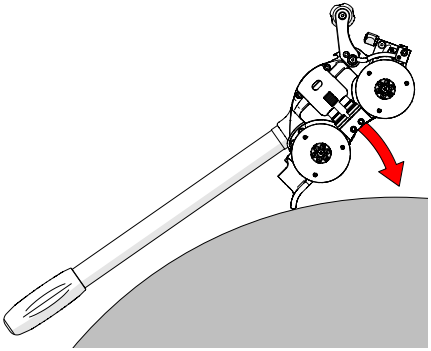

Fig. 208 - Pivot on pry point towards scan surface

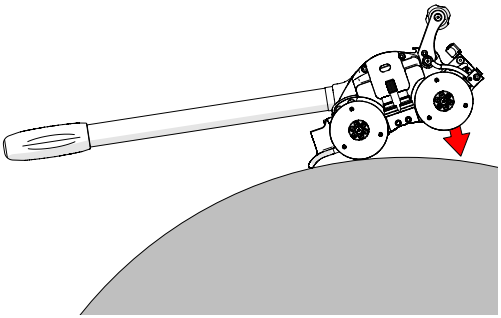

Fig. 209 - Lower scanner as gently as possible

7. With a firm grip on the manipulation handle, slowly lower the wheels of the crawler *(Fig. 208)* towards the inspection surface until all four wheels contact the surface.

6.3. Removal of Crawler from Inspection Surface

WARNING! HOT SURFACE. The **SKOOT HT** crawler may reach temperatures that may cause burns if contacted with bare skin. Wear heat resistant safety gloves when handling.

IMPORTANT! It is important to place the crawler on the inspection surface as instructed below to protect the electronic components within the crawler from damaging shock. The crawler should never be slammed directly onto the surface.

CAUTION! Do **NOT** handle crawler using the umbilical cable. Use the provided handles.

WARNING! MAGNETIC MATERIAL. The wheels of the crawler produce an extremely strong magnetic field which may cause failure or permanent damage to items such as watches, memory devices, CRT monitors, medical devices or other electronics.

Tools, magnets and metal objects can cut, pinch or entrap hands and fingers. **HANDLE WITH CARE**.

People with pacemakers or ICD's must stay at least 25 cm *(10 in)* away.

To remove the crawler on the inspection surface, follow these steps:

NOTE: Umbilical, accessories and hoses not included in illustration.

1. Ensure the manipulation handle is installed on the crawler.

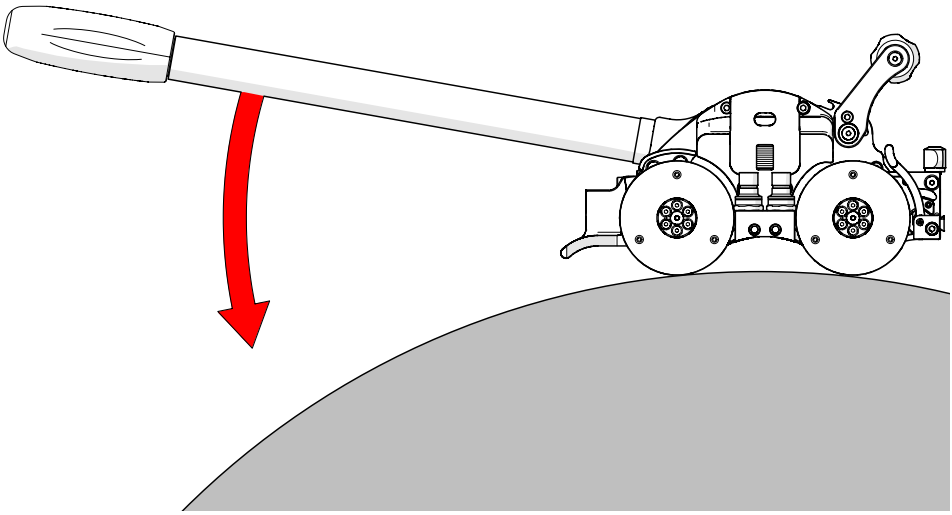

Fig. 210 - Press down on manipulation handle

2. Firmly grasp the crawler handle with one hand, and the manipulation handle with the other, carefully press down on the manipulation handle to lower the pry point of the crawler towards the inspection surface *(Fig. 210)*.

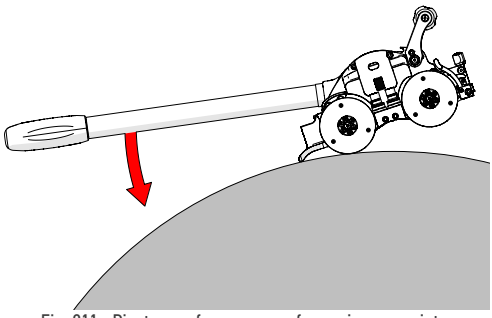

Fig. 211 - Pivot away from scan surface using pry point

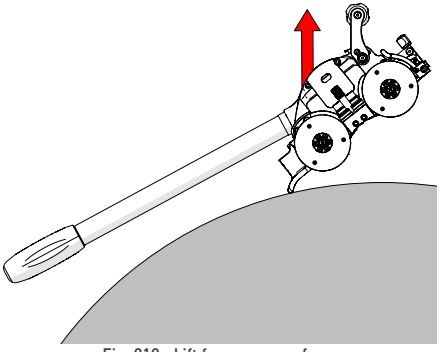

Fig. 212 - Lift from scan surface

3. When the front two wheels of the crawler separate from the scan surface, continue to press down on the manipulation handle *(Fig. 211)*.
4. Pivot the crawler away from the scan surface and lift the crawler using the manipulation handle and the crawler handle *(Fig. 212)*.

6.4. Operation

6.4.1. Handheld Controller Layout

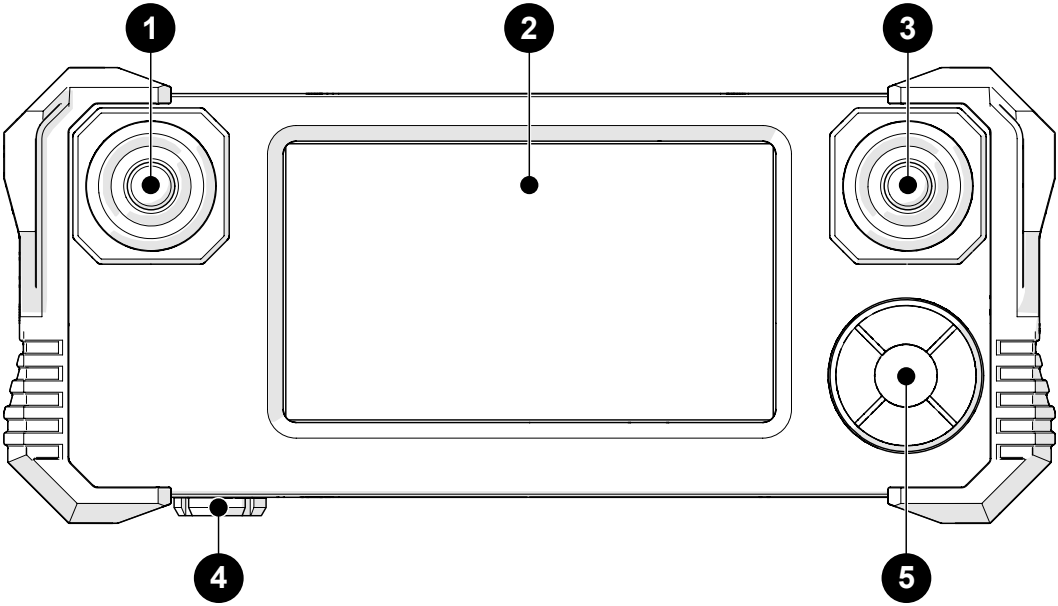

Fig. 213 - Handheld Controller

1	Raster joystick	*(see "Joysticks" on page 96)*
2	Touchscreen	*(see "Touchscreen" on page 96)*
3	Fwd/Rev joystick	*(see "Joysticks" on page 96)*
4	Controller cable connector	Connection point for the auxiliary cable.
5	D-pad	A means of navigating the on screen menus of the handheld controller.

6.4.1.1 Touchscreen

The 2 handheld controller touchscreen is the primary operator interface for the system. Buttons are indicated on-screen with a red border *(Fig. 213)*.

6.4.1.2 D-pad

The 5 D-pad provides a redundant system control that may be utilized as an alternative to the touchscreen. A blinking box around a button indicates the D-pad selection. Pressing the outer buttons of the D-pad selects different buttons on-screen. Press the centre button of the D-pad to choose the button currently selected *(Fig. 213)*.

6.4.1.3 Joysticks

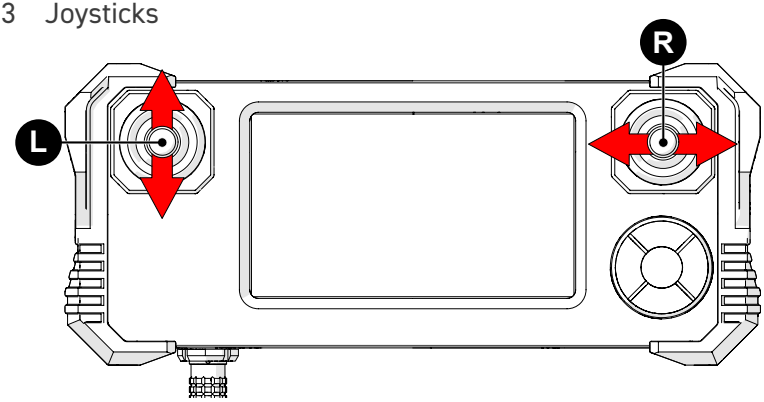

Fig. 214 - Handheld controller joysticks

The joysticks control system motion. The L left joystick controls the forward/reverse movement of the crawler. The R right joystick controls Raster Arm HT movement *(Fig. 214)*.

6.4.2. Mode Select Screen

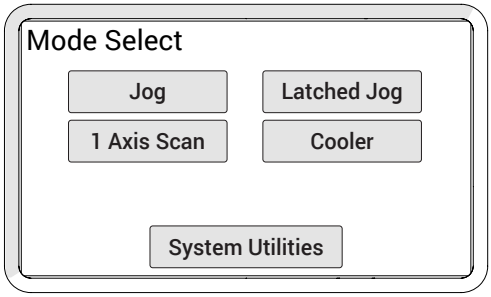

Fig. 215 - Mode select

The **Mode Select** screen offers four modes of operation for the system:

Jog Mode	*(see "Jog Mode" on page 97)*
Latched Jog Mode	*(see "Latched Jog Mode" on page 99)*
1 Axis Scan Mode	*(see "1 Axis Scan Mode" on page 100)*
Cooler	*(see "Cooler Mode" on page 103)*
System Utilities	*(see "System Utilities Screen" on page 106)*

6.4.3. Jog Mode

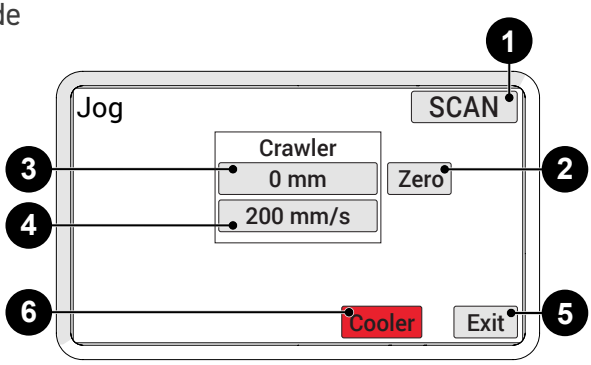

Fig. 216 - Button identification

Jog mode manually controls the system movement using the joysticks.

1 Scan/Rapid Button *(Fig. 216)*	Used to quickly switch between crawler speeds. The speed in either mode can be manually set to the users preference. *TIP: Fine adjustments of speed can be made in the User Settings (see "User Settings Screen" on page 106).*
2 Zero Button	Sets the current position to zero for all modules.
3 Module Position Button*(s)*	Displays the current position of the crawler and the Raster Arm HT. Press to set the position to any value using the **Edit** screen. When a module position is modified, the position will be modified for all other system modes. *NOTE: This function only zeroes the number displayed on the SKOOT HT handheld controller. It does not zero the position used in the data acquisition instrument.*
4 Module Rate Button*(s)*	Displays the current maximum rate for the selected speed mode. Press to set the maximum rate using the **Edit** screen. The movement commanded by the joysticks will be limited to the indicated rate. When a rate is modified, the rate will be modified for all other system modes.
5 Exit Button	Exits the jog mode and returns to the **Mode Select** screen.
6 Cooler Button	Press to access the cooler controls. The cooler button will blink rapidly to indicate that the cooler is deactivated and not pumping coolant to the scanner.

6.4.4. Latched Jog Mode

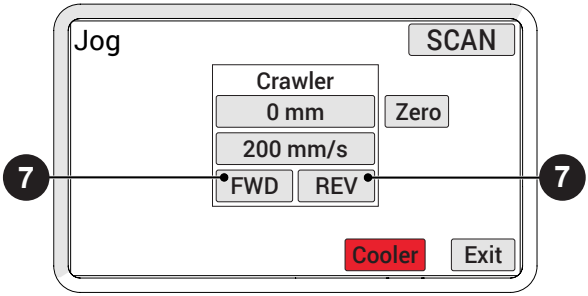

Fig. 217 - Latched jog mode

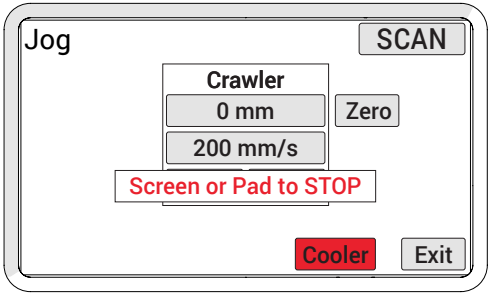

Fig. 218 - Latched jog stop screen

Identical to standard jog mode, latched jog mode adds forward or reverse crawler movement at the selected scan rate. This eliminates the need to manually hold the left joystick *(see "Jog Mode" on page 97)*.

7	FWD & REV Buttons:	The **FWD** and **REV** buttons are located in the crawler tab. Press the **FWD** or **REV** button to drive the crawler at the current maximum scan rate. Touching the handheld controller screen or pressing the D-pad stops crawler movement.

> *NOTE: The FWD & REV Buttons will not be present in rapid mode.*

6.4.5. 1 Axis Scan Mode

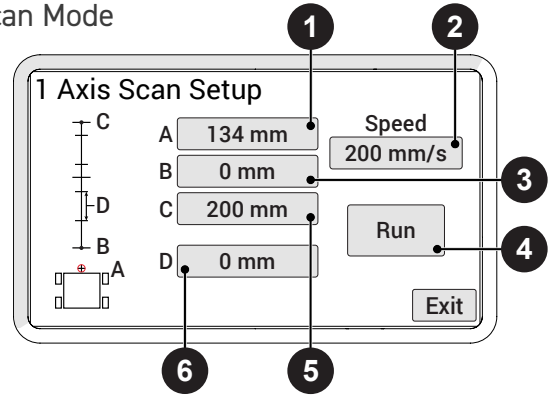

Fig. 219 - 1 Axis scan mode

1 Axis Scan mode drives the crawler in a straight line, stopping at programed intervals.

1	Point A	The current encoder position of the crawler.
2	Speed Button	Access the **User Settings** screen to set the crawler's scan speed.
3	Point B	The start point of the scan travel. The system will move the scanner from the **A** point to this point at the start of a scan.
4	Run Button	Enables the **1 Axis Scan** screen *(see "1 Axis Scan Screen" on page 101)*.
5	Point C	The finish point of the overall scan travel.
6	Setting D	The distance the system will advance.

The **1 Axis Scan Setup** screen indicates the scan functions that may be entered. Each point and setting, **A**, **B**, **C**, **D**, corresponds to a coordinate entry button on the screen.

A typical scan begins at the **A** position and moves to the **B** position. Scanning begins at the **B** position and scans the distance of **D** until the **C** position is reached.

6.4.5.1 1 Axis Scan Screen

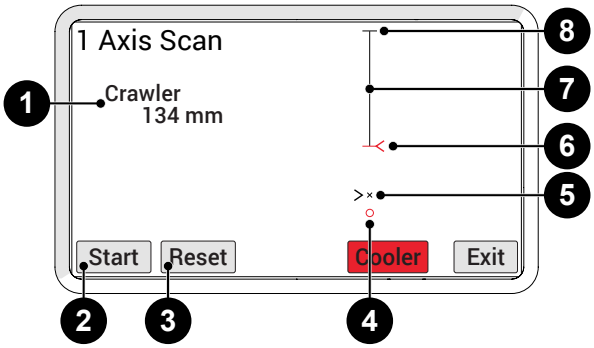

Fig. 220 - 1 Axis scan screen

The **1 Axis Scan** screen initiates and monitors scan, and advances the set distance The initial scan screen is an approximation of a full view *(zoomed out)* of the entire scan path.

1 Crawler (Motor) *(Fig. 220)*	The current encoder position of the crawler. If an idler encoder is available, it will also indicate the encoder selected (Motor or Idler) for crawler positioning as set in the User Settings *(see "User Settings Screen" on page 106).*
2 Start/Stop button	Start or stop the scan sequence. When a scan has been stopped while in progress, the start button resumes the scan.
3 Reset	Return the scanner to the **A** position. Press the start button to begin the scan sequence from the initial setting.
4 Scan location	Small red circle indicates the **A** position.
5 Scanner position	The blinking cross hair indicates the current scanner position.
6 Next scanner position	Where the scanner will travel to next. *NOTE: The red indicator is always where the scanner will go next.*
7 Summary screen	A visual representation of the scan area.
8 End position	The completed distance of programed travel.

When Start is pressed the first time, the scanner will travel to point **B** and pause. The summary screen shows a closer view *(zoom in)* of the scan path.

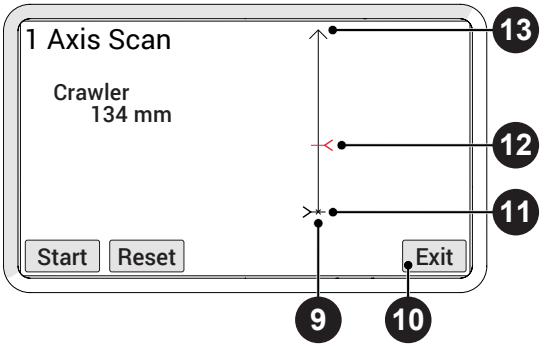

Fig. 221 - 1 Axis scan screen

9	Scanner location	The current encoder position of the crawler.
10	Exit button	Pressing **Exit** stops all scanning motion. When the scanner is not in the **A** position a warning appears *(Fig. 222)*. The warning alerts that the **A** position of the scanner will be changed to the current position.
11	Scanner position	The blinking cross hair indicates the scanner position.
12	Next scanner position	When the scanner will travel to next.
13	End point	Arrow indicates the travel will continue to advance, Straight line indicates end of programed travel.

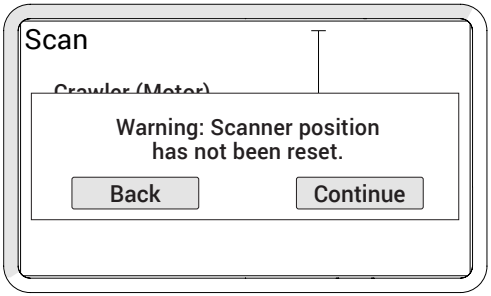

Fig. 222 - Exit warning

Press **Back** to return to the **1 Axis Scan** screen to reset scanner and maintain original **A** position. Press **Continue** to exit to **1 Axis Scan Setup** screen.

6.4.6. Cooler Mode

For complete instructions *(see "Cooler" user manual for additional details and instructions).*

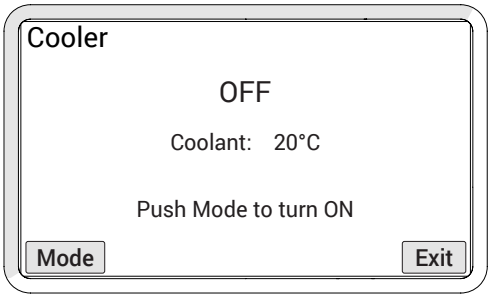

Fig. 223 - Standby screen

The **Cooler** screen controls cooler operation *(Fig. 223)*. The **Mode** button operates as a toggle to activate, deactivate the cooler. The **Exit** button navigates to the previous screen.

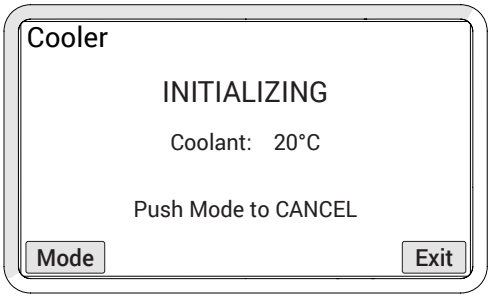

Fig. 224 - Initializing screen

Press the **Mode** button to activate the cooler. The **Initializing** screen appears *(Fig. 224)*.

> *NOTE: Initializing will time-out if closed-loop flow is not fully established after 3 minutes.*

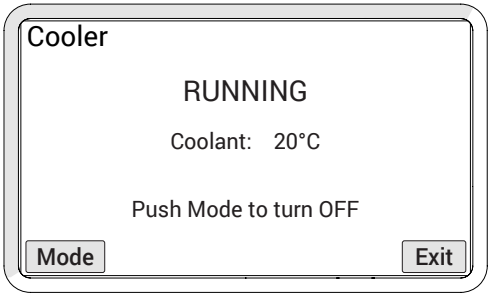

Fig. 225 - Running screen

Normal Cooler operation begins when the operating flow is achieved. The **Running** screen is displayed *(Fig. 225)*.

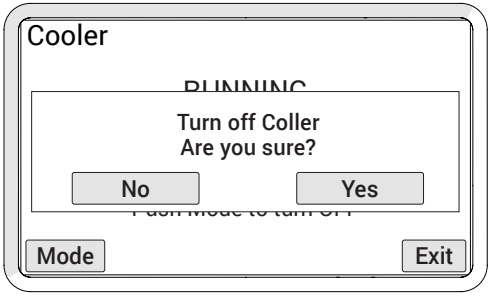

Fig. 226 - Running screen

While the Cooler is performing normal operation, pressing the **Mode** button displays a confirmation screen for Cooler shutdown *(Fig. 226)*. If the **Yes** is not pressed within a 5 second period, normal Cooler operation continues and the **Running** screen appears.

> *NOTE: During shutdown confirmation, the system continues to operate normally until the YES button is pressed.*

6.4.7. Cooler Warnings

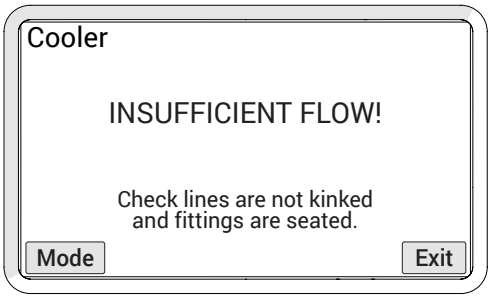

Fig. 227 - Warning screen

If warning appears during initialization *(Fig. 227)*:

- Pump will turn off.
- User to ensure hoses are straight, unobstructed and contains no kinks or awkward bends.
- Press the **Mode** button to restart the Cooler.

If warning appears while the Cooler is running *(Fig. 227)*:

- Pump will remain on.
- If hoses can not be quickly adjusted to remove warning, remove device relying on Cooler from any hot surface.

6.4.8. System Utilities Screen

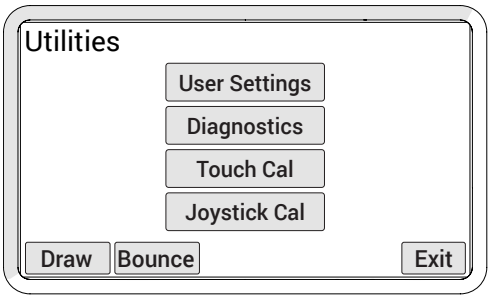

Fig. 228 - Utilities screen

The **Utilities** screen provides access to the setup, diagnostics and user preference settings.

User Settings Button *(Fig. 228)*	Access the **User Settings** screen allowing for various user preferences to be adjusted.
Diagnostics Button	Enters the Diagnostic screens to monitor system components and function.
Touch Cal Button	Used to initiate the Touch Calibration screen.
Joystick Cal Button	Used to enter the Joystick Calibration screen.
Draw Button	Enters mode used to test the touch screen accuracy and response.

6.4.8.1 User Settings Screen

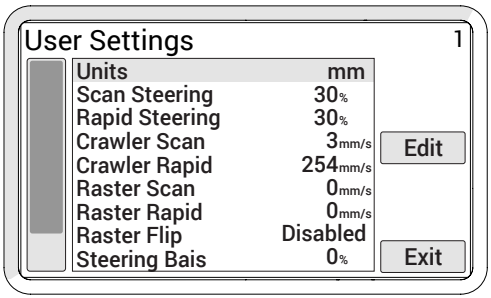

Fig. 229 - User settings screen

Allows user to customize the system to their preferences.

Use the touch screen or D-pad to select different settings.

Press **Edit** to enter the **Edit** screen to apply changes to the selected setting.

Title	Description	Valid Range	Default
Units	Changes the measurement units for display and user entry. When set to 0, units measure in inches. When set to 1, units measure in millimetres.	inches or mm	mm
Crawler Scan	Sets the crawler scan rate in the current units/second. This setting can also be changed through the Jog or Two Axis Scan Speed screens.	5-142 mm/s *(0.2-5.6 in/s)*	43 mm/s *(1.7 in/s)*
Crawler Rapid	Sets the crawler rapid rate in the current units/second. This setting may also be changed within other modes.	5-142 mm/s *(0.2-5.6 in/s)*	142 mm/s *(5.6 in/s)*
Display Brightness	Sets the brightness of the display.	0-100	100%

6.4.8.2 Diagnostics Screens

Several diagnostic screens allow various system functions to be monitored. Navigate to different diagnostic screens using the **PREV** and **NEXT** buttons. The **Exit** button returns to the **System Utilities** screen.

> *NOTE: The diagnostic information requires an in depth understanding of the underlying technologies and programming in the system. Not all functions and information is explained in this manual.*

6.4.8.2.1 Detected Modules

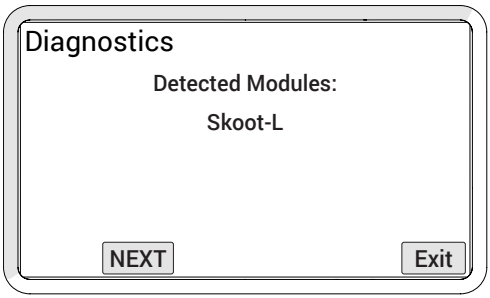

Fig. 230 - Detected modules screen

Screen indicates the system software version and displays which modules were detected when the system was activated.

6.4.8.2.2 System 1

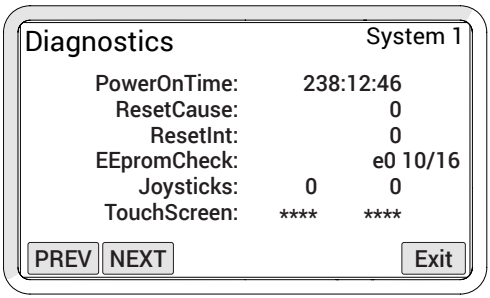

Fig. 231 - Diagnostic screen

System 1 diagnostic screen displays general system function information.

PowerOnTime	The total accumulative time the handheld controller has been powered.
Joysticks	Indicates the raw position reading from the joysticks.
TouchScreen	Indicates the raw position reading from the last touchscreen contact.

6.4.8.2.3 System 2

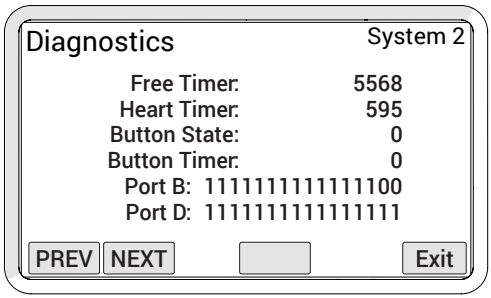

Fig. 232 - Diagnostic screen

Additional general system function information is displayed within the **System 2** screen. An empty button is provided to allow testing of the D-pad.

Free Timer	Value from a free running system timer. If this timer is static, an internal controller issue is present.
Button State	Shows the state of the pushbuttons in the D-pad.
Button Timer	Shows the timer associated with the D-pad.

6.4.8.2.4 System 3

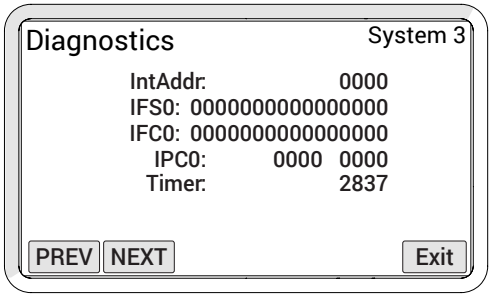

Fig. 233 - Diagnostic screen

The **System 3 Diagnostic** screen displays additional system information. The information provided does not typically assist the user.

6.4.8.2.5 Skoot-L

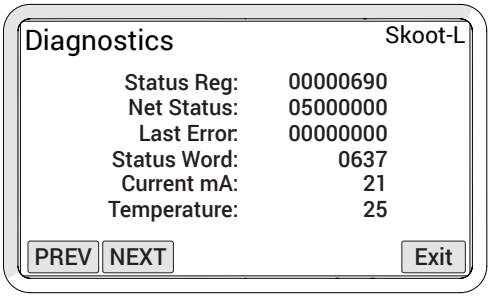

Fig. 234 - Diagnostic screen

The Skoot-L diagnostic screen provides information regarding the status of the crawler. A separate screen is available for each module detected upon system startup.

Current MA	Displays the output of the crawler to the motor. The current (mA) displayed is directly proportional to the motor's output torque. This reading can be used to check if the control system is responding to forces on the modules motor.
Temperature	Internal temperature reading of the crawler in degrees Celsius.

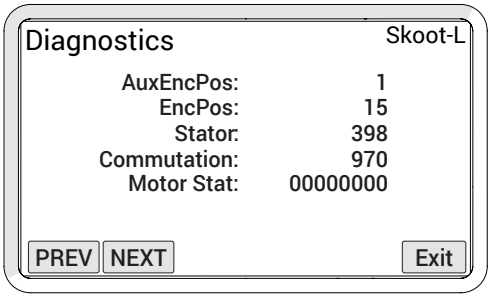

Fig. 235 - Diagnostic screen

AuxEncPos	Displays the position of the auxiliary encoder in counts when connected to the module. When the auxiliary encoder is moved, this number will change. When the encoder is moved from its current position and then back to that exact same position, this number will also return to its original position.
EncPos	The position of the modules motor encoder in counts.

6.4.8.3 Touch Calibration Screen

Fig. 236 - Touch calibration screen

This option allows calibration of the touch screen. Typically, this should not be necessary.

Touch the screen as the markers appear in the four corners of the screen.

> *TIP: It is recommended that the markers be touched with a small object to enhance the touch position accuracy during calibration.*

The new calibration is stored immediately when the fourth marker is pressed. The calibration utility exits and return to the **System Utilities** screen. To abort the calibration, the system power may be turned off before the last marker is pressed.

6.4.8.4 Joystick Calibration Screen

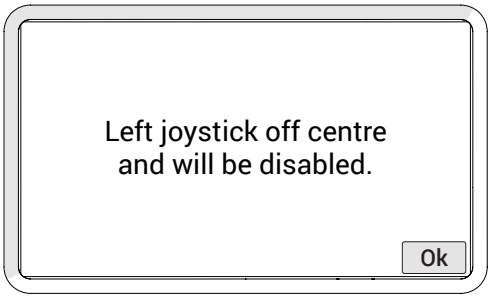

Fig. 237 - Joystick error

Typically joystick calibration is only necessary when a joystick off center error is detected upon startup *(Fig. 237)*. Calibration may also be used when a joystick function does not appear to be properly centred.

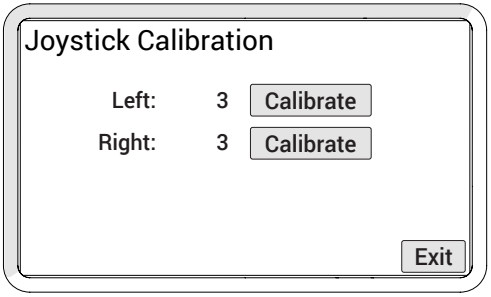

Fig. 238 - Joystick calibration screen

Current readings of the joysticks are displayed on the **Joystick Calibration** screen *(Fig. 238)*. When the numbers are not near zero, press the **Calibrate** button to recalibrate to 0. The new calibration is stored when the **Exit** button is pressed.

6.4.8.5 Draw

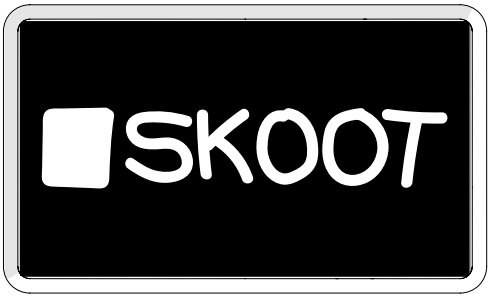

Fig. 239 - Draw utility

The draw utility may be used to test the function of the touchscreen. Exit the utility by pressing the D-pad.

6.4.9. High Internal Temperature Screen

CAUTION! HOT SURFACE. The handles of the crawler and crawler body may be hot to the touch. Use appropriate protective equipment when removing a crawler from a high temperature surface.

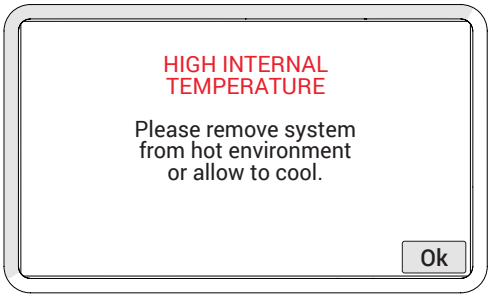

Fig. 267 - High internal temperature screen

When the system approaches its maximum operating temperature, the high internal temperature screen will display. When this alert screen is displayed, all motor and system function will cease.

Press **OK** to reactivate the system to remove SKOOT HT from the scan surface.

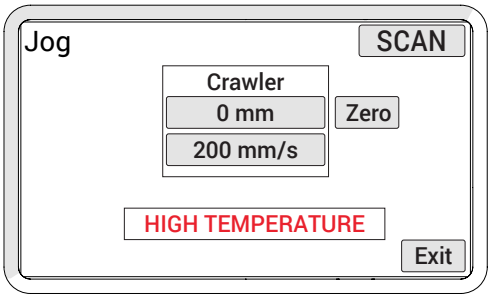

Fig. 240 - High internal temperature screen

Should the user choose to continue operating the crawler, the HIGH TEMPERATURE warning will continue to display until the temperature falls below the set temperature limit.

7.1. Safety Precautions Before Maintenance

WARNING! ELECTRICAL SHOCK HAZARD. Disconnect the power controller when servicing the equipment. The power controller is powered even when the E-Stop push-button is latched in the off position.

WARNING! MAGNETIC MATERIAL. The wheels of the crawler produce an extremely strong magnetic field which may cause failure or permanent damage to items such as watches, memory devices, CRT monitors, medical devices or other electronics.

Tools, magnets and metal objects can cut, pinch or entrap hands and fingers. **HANDLE WITH CARE**.

Those with pacemakers or ICD's must stay at least 25 cm *(10 in)* away at all times.

7.2. Cleaning

General cleaning of all components is important to keep the system working properly. All components that do not have wiring or cables are completely waterproof. Components can be washed with warm water, dish soap and a medium bristle brush.

Before using the scanner ensure that all connectors are free of water and moisture.

TIP: All components with wiring, cables or electrical connections are splashproof but not submersible.

NOTE: Never use strong solvents or abrasive materials to clean your scanner components.

7.3. Maintenance Schedule

The SKOOT HT system must be maintained according to the following schedule:

Task	Frequency
Inspect safety apparatus This includes: ► All components of tether system. Replace damaged components as necessary.	Every Use
Clean the drive wheels Debris will collect on the magnetic wheels. Remove this debris before every use. An effective cleaning method uses adhesive-backed tape *(e.g. duct tape)* to 'pull' the debris off the wheels.	Every Use
Inspect cables and connectors Inspect the umbilical cable, the control cable and the power controller cable for damage. Have any damaged cable repaired by a qualified person or replace the cable assembly as necessary. Inspect all connectors for damage or moisture. Straighten bent pins. Dry connectors before using.	Every Use
General cleaning Ensure that the scanner stays relatively clean by wiping off any excess dirt or other contaminants after every use.	Every Use

8.1. Startup Issues

Two messages are possible in the event of a startup issue: **Joystick Off Center** or **Checking Network**.

8.1.1. Joystick Off Center

Fig. 241 - Joystick off centre screen

Upon system startup, the joystick positions are detected. When a joystick is detected outside the centre position, the **Joystick Off Center** screen displays indicating the joystick will be disabled. Press **Ok** to continue system startup. All system functions will work normally with the exception of movements that require joystick operation.

Ensure the handheld controller's joysticks are free of interference and reset the system power to enable joystick control.

If no interference of the joystick is present, the joystick calibration may need to be performed *(see "Joystick Calibration Screen" on page 111).*

8.1.2. Checking Network

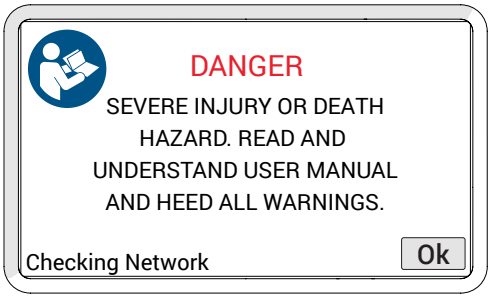

Fig. 242 - Checking network screen

During startup, the system initializes the communications to all the devices on the network. If the network communication fails for any reason, the **Checking Network** message will appear and remain on screen.

Likely causes of this failure:

1. No devices connected to the network.
2. A problem with one of the devices.
3. Cable issue causing the entire network to fail.

Check the connections of the devices or try removing one device at a time from the system to isolate the problem device.

> *NOTE: Always turn off the system power before connecting or disconnecting any devices.*

8.2. Startup Override

A system maintenance mode may be accessed to correct system issues. Enter the maintenance mode by pressing the handheld controller D-pad while system power is activated. Continue pressing the handheld controller D-pad until the **Startup Override** screen appears.

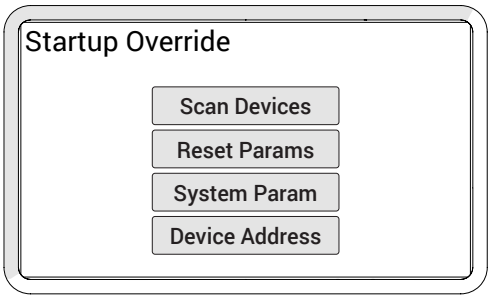

Fig. 243 - Startup override screen

8.2.1. Scan Devices

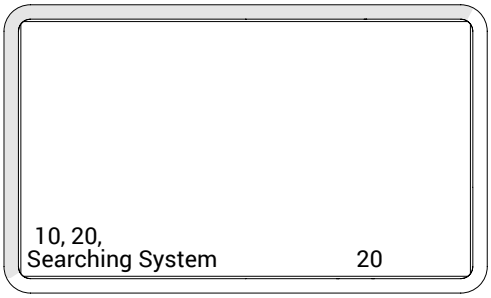

Fig. 244 - Searching System screen

This utility scans the system network for devices. All possible device addresses and speeds are scanned. As devices are found, the address of the devices is displayed. When the scanning is complete, power to the system must be cycled.

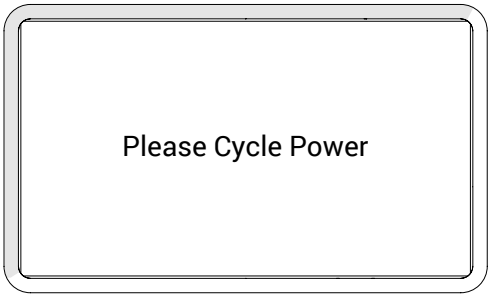

Fig. 245 - Cycle power screen

When a device is connected to the system but is not detected, this most likely indicates an internal device problem.

8.2.2. Reset Parameters

If the system parameters become corrupt or a change is made that prevents the system from functioning properly. All system parameters may be restored to their factory settings by selecting this option. When pressing the **Reset Params** button, the changes occur immediately. Power will need to be cycled for the reset to be complete.

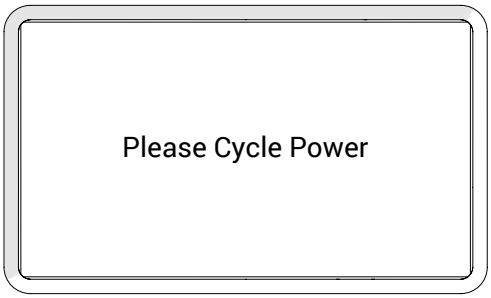

Fig. 246 - Cycle power screen

8.2.3. System Parameters

System parameters are factory set to control a variety of functions. These parameters can not be modified. However, special circumstances may occur when modification of these parameters could be recommended by the manufacturer.

Instructions for making changes to the system parameters will only be provided when deemed necessary by the manufacturer.

8.2.4. Device Address

Instructions for making changes to the system parameters will only be provided when deemed necessary by the manufacturer.

8.3. Additional Issues

Problem	Possible Cause	Solution
Handheld controller display does not activate	Input power requirements not met.	Ensure input power meets requirements. *(see "Encoder Interface Specifications" on page 9)*
	Handheld controller not plugged into power controller.	Plug handheld controller into power controller. Ensure connectors are dry, clean and connector pins are not bent.
	Umbilical cable not properly connected.	Check umbilical cable connections at both ends. Ensure connectors are dry, clean and connector pins are not bent.
	SKOOT HT system not started.	Start the SKOOT HT system. *(see "System Startup" on page 88)*
	Damaged components in controller, crawler, power controller or cabling.	Contact manufacturer. *(see "Jireh Industries Ltd." on page 1)*
Handheld controller display is activated, yet crawler does not drive	Handheld controller is not in correct mode for driving.	*(see Operation on page 95 for additional details)*.
	Damaged components in handheld controller, crawler, power controller or cabling.	Contact manufacturer. *(see "Jireh Industries Ltd." on page 1)*
Crawler does not drive and is unreachable	See possible causes for problem one of this list.	See solutions for problem one. If the crawler is still unresponsive *(see "Retrieval of a Stranded Crawler" on page 121)*

For technical assistance *(see "Technical Support" on page 122)*

8.4. Retrieval of a Stranded Crawler

WARNING! FALLING OBJECT HAZARD.
The tether system must remain active while retrieving the crawler *(i.e. a mechanism or person must be continuously taking up the slack in the tether)*.

Should the SKOOT HT crawler become inoperative while out of reach, attempt first, the solutions offered in this manual *(see "Troubleshooting" on page 116)*

If troubleshooting does not rectify the issue, it may be necessary to retrieve the crawler manually. To do so:

1. Press the E-Stop push-button turning crawler power off.

   NOTE: Under normal conditions, the crawler should begin descending slowly.

2. If the crawler stops descending due to some kind of impediment, use a ladder, man lift or scaffolding to assist the crawler in overcoming the obstacle.

   *NOTE: **FALLING OBJECT HAZARD**. It is **CRUCIAL** that the tether system remains active while retrieving the crawler (i.e. a mechanism or person must be continuously taking up slack in the tether).*

WARNING! ELECTRICAL SHOCK HAZARD. Disconnect the power controller when servicing the equipment. The power controller is powered even when the E-Stop push-button is latched in the off position.

WARNING! MAGNETIC MATERIAL. The wheels of the crawler produce an extremely strong magnetic field which may cause failure or permanent damage to items such as watches, memory devices, CRT monitors, medical devices or other electronics.

Tools, magnets and metal objects can cut, pinch or entrap hands and fingers. **HANDLE WITH CARE**.

Those with pacemakers or ICD's must stay at least 25 cm *(10 in)* away at all times.

WARNING! DO NOT DISASSEMBLE. No user-serviceable parts. Disassembling any of the components in this product, beyond the instructions in this user manual, could void the regulatory certifications and/or effect the safety of the product.

9.1. Technical Support

For technical support contact Jireh Industries *(see "Jireh Industries Ltd." on page 1)*.

SPARE PARTS

To order accessories or replacement parts for your **SKOOT HT** system.
(contact Jireh Industries Ltd. on page 1)

> *NOTE: These drawings are for parts order. This is not a list of kit contents.*

10.1. SKOOT HT Crawler

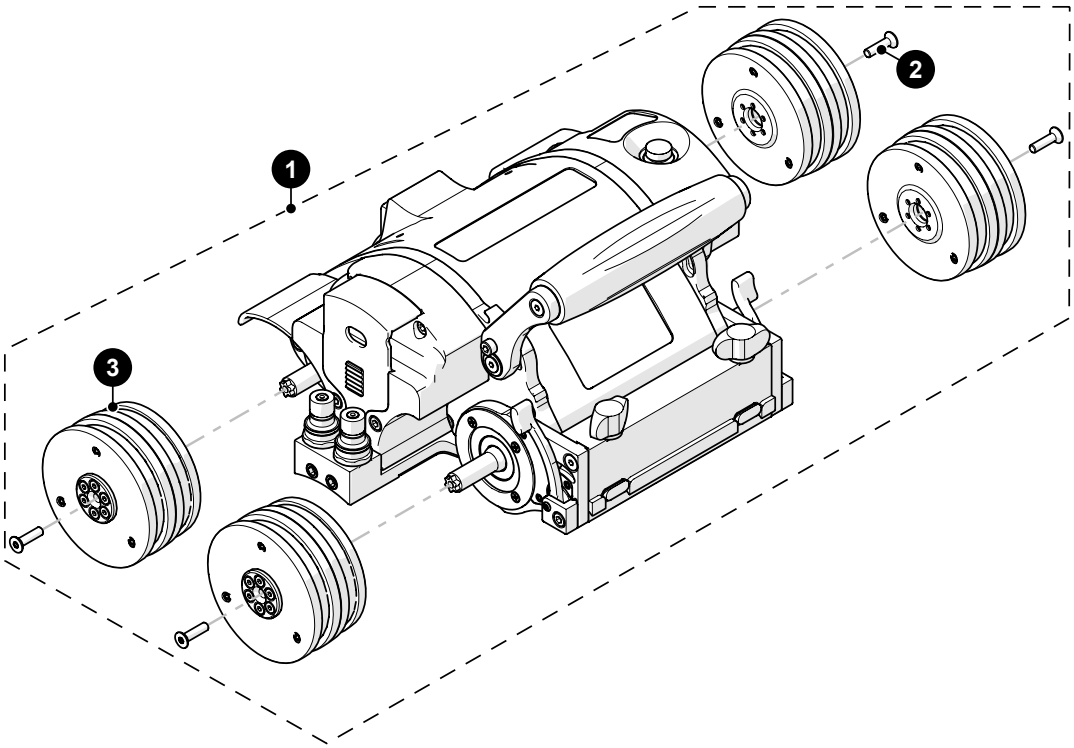

Fig. 247 - SKOOT HT base crawler spare parts

BOM ID	Part #	Description
1	DPA003	SKOOT HT: Base Crawler
2	MD395-016	FHCS-TX, M4x0.7 X 12 mm, ST
3	DPS003	SKOOT HT: Magnetic Wheel

10.2. SKOOT HT Kit Components

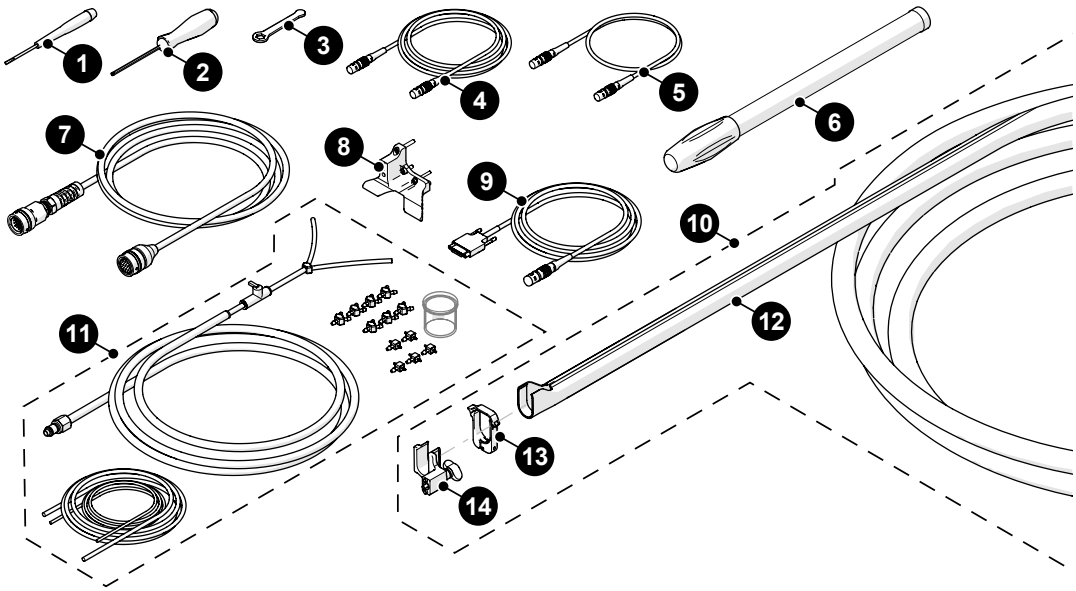

Fig. 248 - Kit components spare parts

BOM ID	Part #	Description
1	EA480	Flat Driver: 3 mm *(0.118 in)*
2	EA414	Hex Driver: 3 mm *(0.118 in)*
3	EA470	3/8 in Wrench
4	UMA017-06	Auxiliary Cable 6 m *(19.6 ft)*
5	UMA017-01	Auxiliary Cable 1 m *(3.3 ft)*
6	DNS006	Manipulation Handle
7	UMA043-07.5	SKOOT HT Umbilical 7.5 m *(25 ft)*
8	DNG006	Pry Point
9	UMA025-X-07.5	J300 Encoder Cable *(see Encoder Connector Type)*
10	CXS113-X	HT Cable Management *(various lengths available)*
11	CMG009-X	Irrigation Kit, 2-4 Probe, Large Tube *(various lengths available)*
12		*see HT Cable Management Sleeving*
13	CXS114	HT Cable Management Clamp
14	CXS112	HT Cable Management Mount: threaded mount

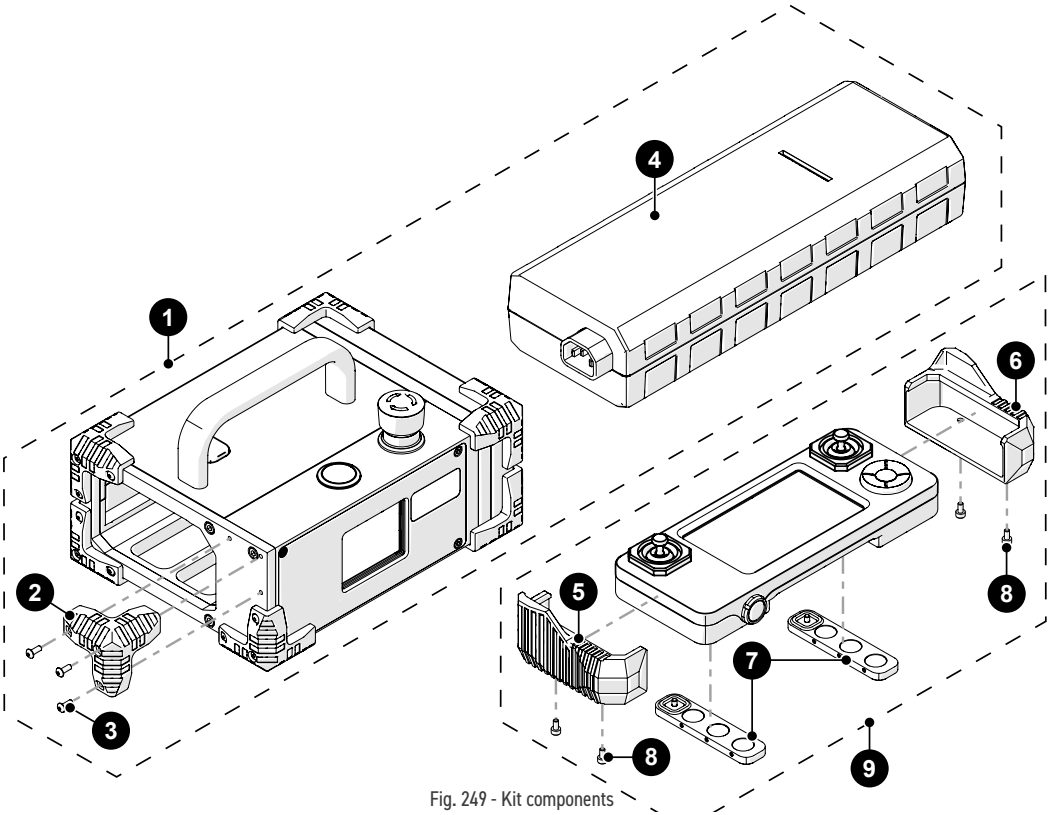

Fig. 249 - Kit components

BOM ID	Part #	Description
1	CXA040	Power controller *(see Power Cord Type)*
2	DY0011	Rubber bumper
3	MD072-008	BHCS, M3x0.5 X 8mm, SST
4	CXS122	Power supply
5	DM0067-L	Handheld controller bumper *(left)*
6	DM0067-R	Handheld controller bumper *(right)*
7	DMS005	Handheld controller magnet holder
8	MD049-006	SHCS, M3x0.5 X 6mm, SST
9	DMA006	Handheld controller

10.2.1. Encoder Connector Type

Connector Type	Company/Instrument	Connector Type	Company/Instrument
B	Olympus OmniScan MX Zetec Topaz	G	Sonotron Isonic 25xx
C	Olympus Focus LT Zetec Z-Scan Eddyfi Ectane 2	U	Sonatest Veo / Prisma
E	Olympus OmniScan SX/MX2/X3 M2M MANTIS/GEKKO LEMO	V	Pragma PAUT
F	TD *(Technology Design)*	AD	Sonatest Veo / Prisma - Single Axis

NOTE: Additional encoder connector types available (contact Jireh Industries Ltd. on page 1).

10.2.2. Power Cord Type

Connector Type	Power Cord	Connector Type/ Part #	Power Cord
N **SL032**	North American 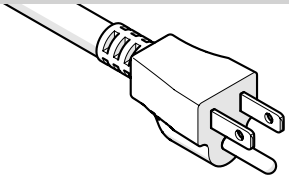	**U** **SL059**	United Kingdom 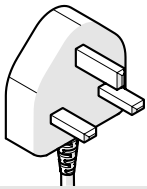
E **SL039**	European 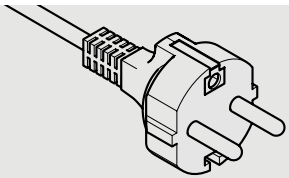	**Z**	No Cord

Fig. 250 - Power cord type

10.3. Hose Spare Parts

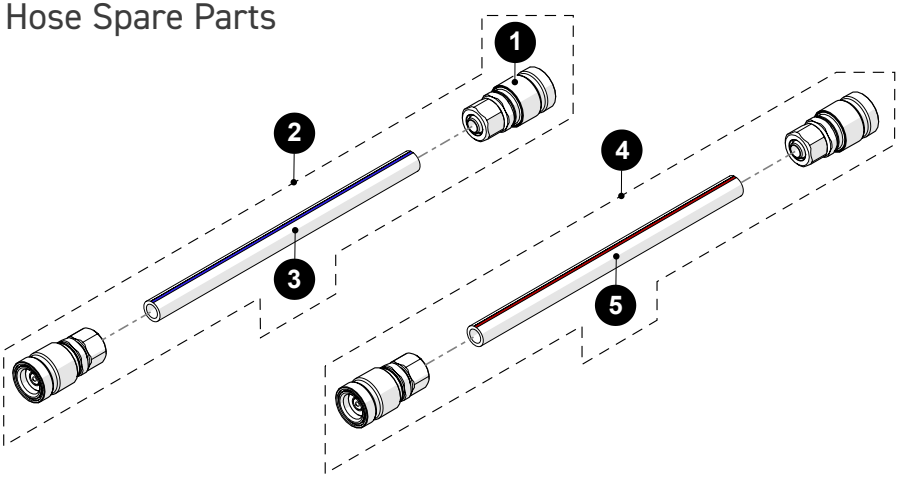

BOM ID	PART #	Description
1	DP0056	Hose Fitting
2	DPA004-BLU-0.75	Hose Blue
3	LA139	Hose Blue, 1/4” ID x 3/8” OD, 7.5 m *(25 ft)*
4	DPA004-RED-07.5	Hose Red
5	LA140	Hose Red, 1/4” ID x 3/8” OD, 7.5 m *(25 ft)*

Fig. 251 - Hose spare parts

10.4. Probe Holder Frame

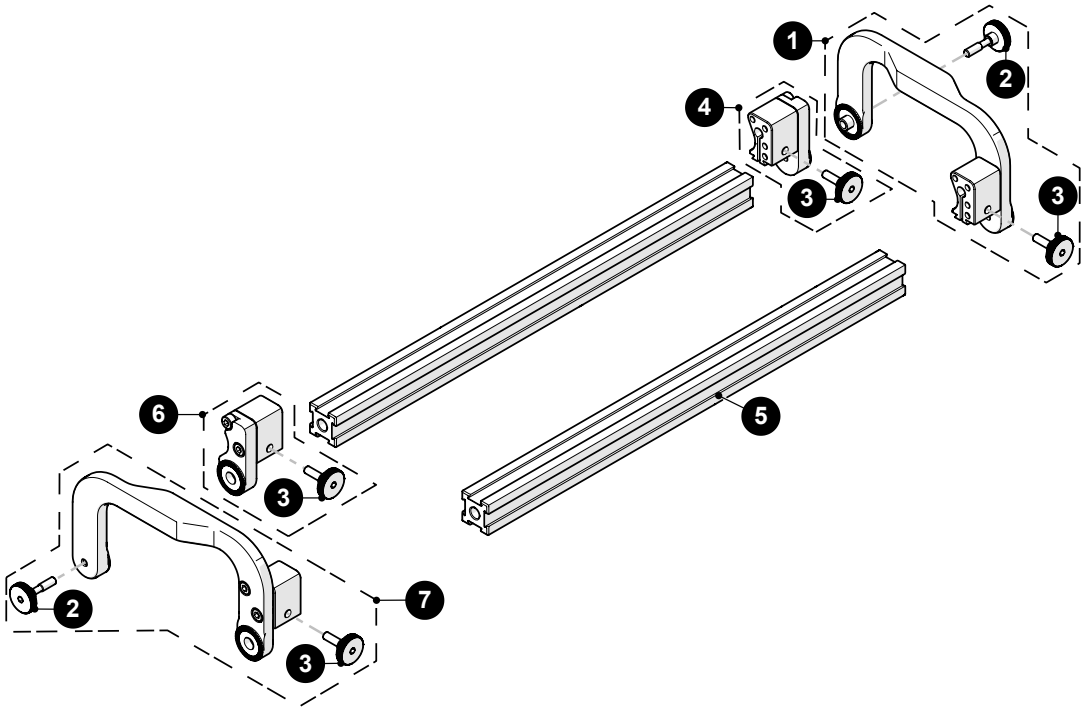

BOM ID	Part #	Description
1	CXS043	Vertical Probe Holder Side Arm, Left
2	CX0125	Knob, M4 x 16 mm
3	CX0126	Knurled Knob, M4 x 0.7 x 11.5 mm, 3 mm hex, 4 mm stand off, SST
4	CXS072-L	Arm Mount Block, Left
5	BG0038-X	Frame Bar *(see Frame Bar)*
6	CXS072-R	Arm Mount Block, Right
7	CXS042	Vertical Probe Holder Side Arm, Right

Fig. 252 - Probe holder frame parts

10.5. Low Profile Probe Holder Frame

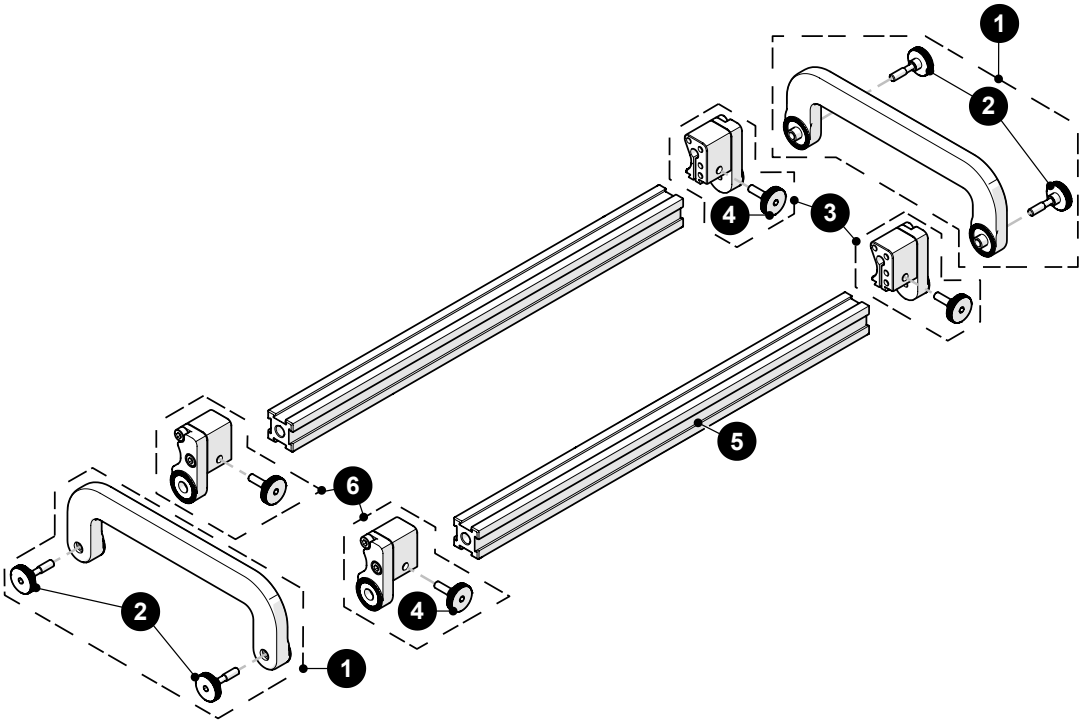

BOM ID	Part #	Description
1	CXS023	Low Profile Side Arm
2	CX0125	Knob, M4 x 16 mm
3	CXS072-L	Arm Mount Block, Left
4	CX0126	Knurled Knob, M4 x 0.7 x 11.5 mm, 3 mm hex, 4 mm stand off, SST
5	BG0038-X	Frame Bar *(see Frame Bar)*
6	CXS072-R	Arm Mount Block, Right

Fig. 253 - Low profile probe holder frame parts

10.6. Pivoting Probe Holder Frame

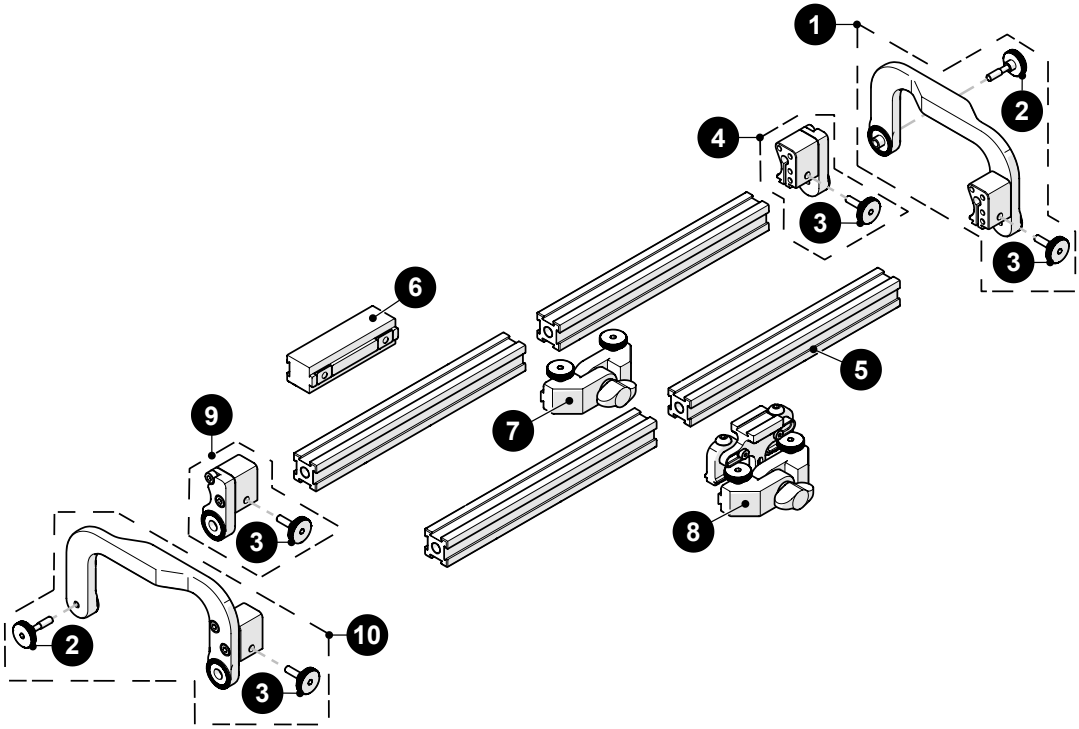

BOM ID	Part #	Description
1	CXS043	Vertical Probe Holder Side Arm, Left
2	CX0125	Knob, M4 x 16 mm
3	CX0126	Knurled Knob, M4 x 0.7 x 11.5 mm, 3 mm hex, 4 mm stand off, SST
4	CXS072-L	Arm Mount Block, Left
5	BG0038-X	Frame Bar *(see Frame Bar)*
6	CXS064	NAVIC Front Spacer Mount
7	CXS055	Frame Bar Pivot
8	CXS059	Optical Guide Pivot Mount
9	CXS072-R	Arm Mount Block, Right
10	CXS042	Vertical Probe Holder Side Arm, Right

Fig. 254 - Pivoting probe holder parts

10.7. Slip Joint Probe Holder Parts

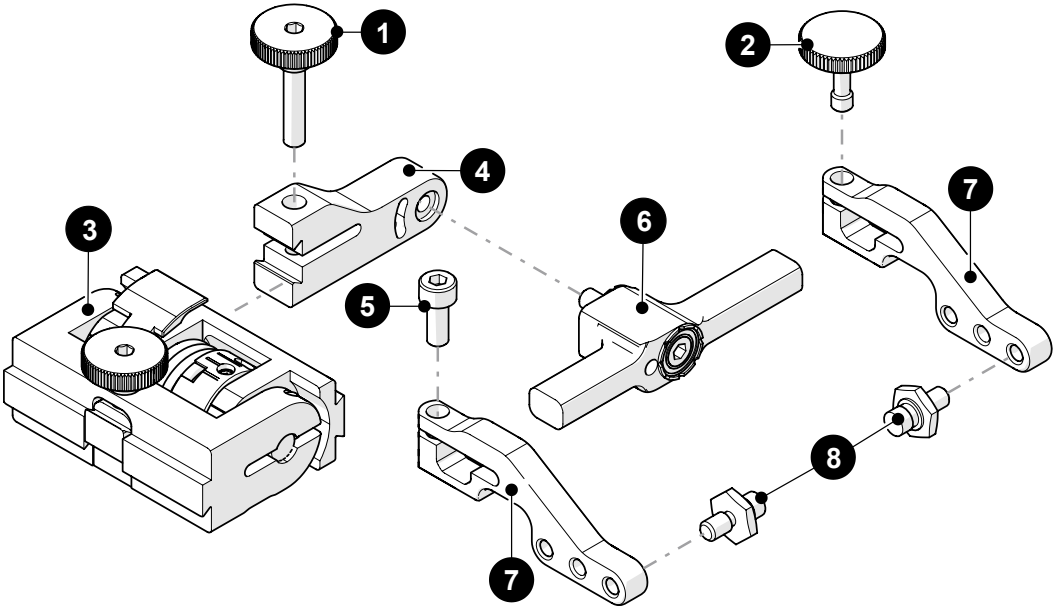

BOM ID	Part #	Description
1	PH0104	Knurled Knob, M4 x 0.7 x 18 mm, 4 mm stand off, SST
2	PH0082	Knurled Knob, M4 x 0.7 x 10 mm, 3 mm stand off, SST
3	PHS022	Slip Joint Probe Holder Subassembly
4	*see Swing Arm Style*	
5	MD050-010	SHCS, M4 x 0.7 x 10 mm, SST
6	*see Yoke Style*	
7	*see Arm Style*	
8	PH0011-X	Pivot Button Style *(see Pivot Button Style)*

Fig. 255 - Slip joint probe holder parts

10.8. Vertical Probe Holder Parts

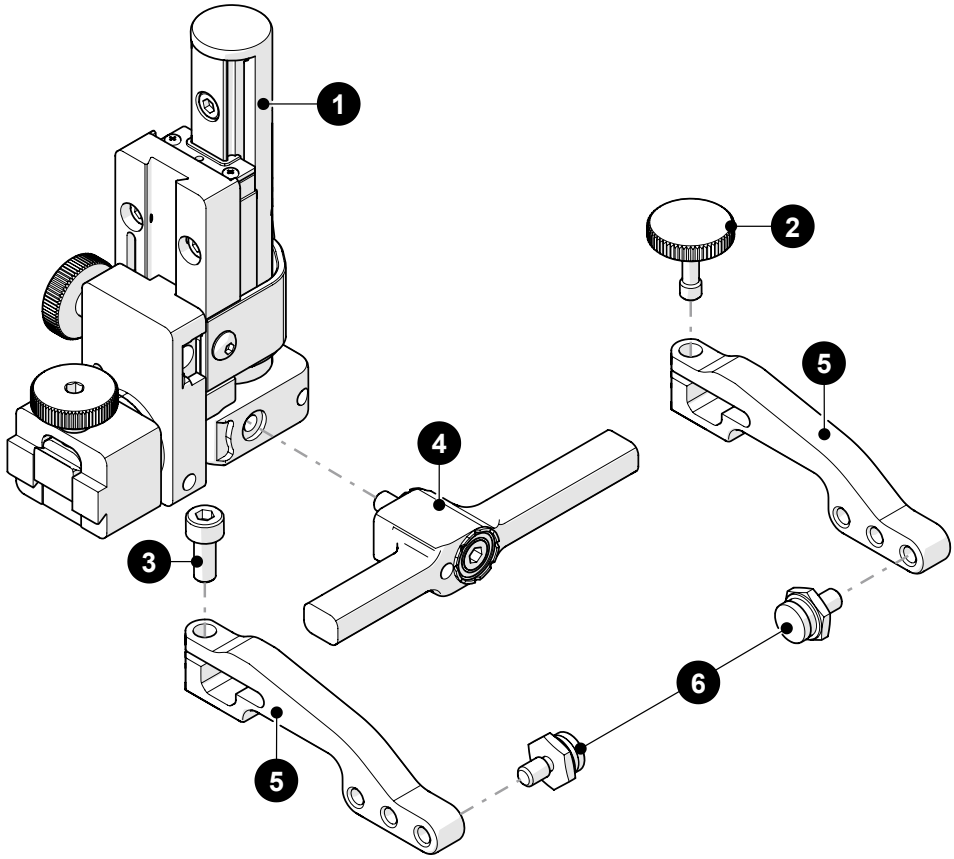

BOM ID	Part #	Description
1	PHS028	Vertical Probe Holder Subassembly
2	PH0082	Knurled Knob, M4 x 0.7 x 10 mm, 3 mm stand off, SST
3	MD050-010	SHCS, M4 x 0.7 x 10 mm, SST
4	*see Yoke Style*	
5	*see Arm Style*	
6	PH0011-X	Pivot Button Style *(see Pivot Button Style)*

Fig. 256 - Vertical probe holder parts

10.9. Heavy Duty Vertical Probe Holder

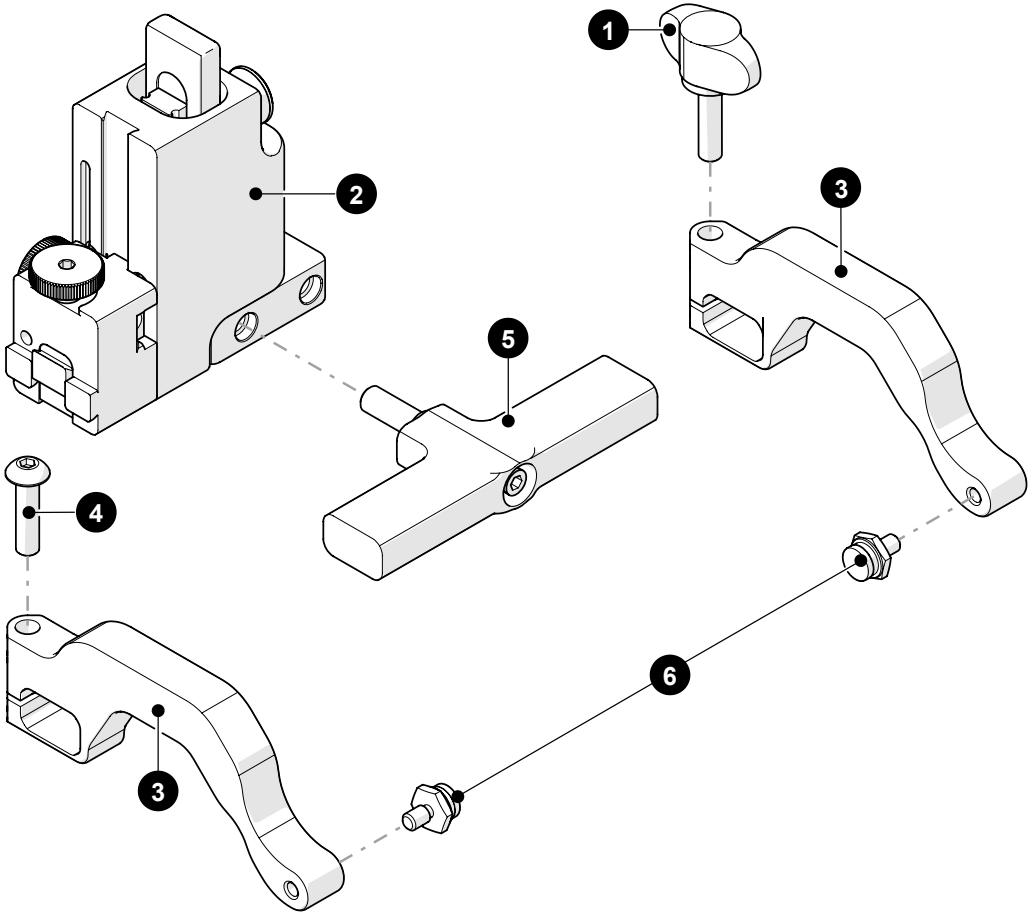

BOM ID	Part #	Description
1	EA154	Probe Holder Arm Adjustment Knob
2	PHS049	Heavy Duty Probe Holder Subassembly
3	PH0165	Heavy Duty Probe Holder Arm, Standard, Drop
4	MD074-020	BHCS, M5 x 0.8 x 20 mm, SST
5	*See Heavy Duty Yoke Style*	
6	PH0011-X	Pivot Button Style *(See Pivot Button Style)*

Fig. 257 - Heavy duty vertical probe holder parts

10.10. Corrosion Thickness Probe Holder HT

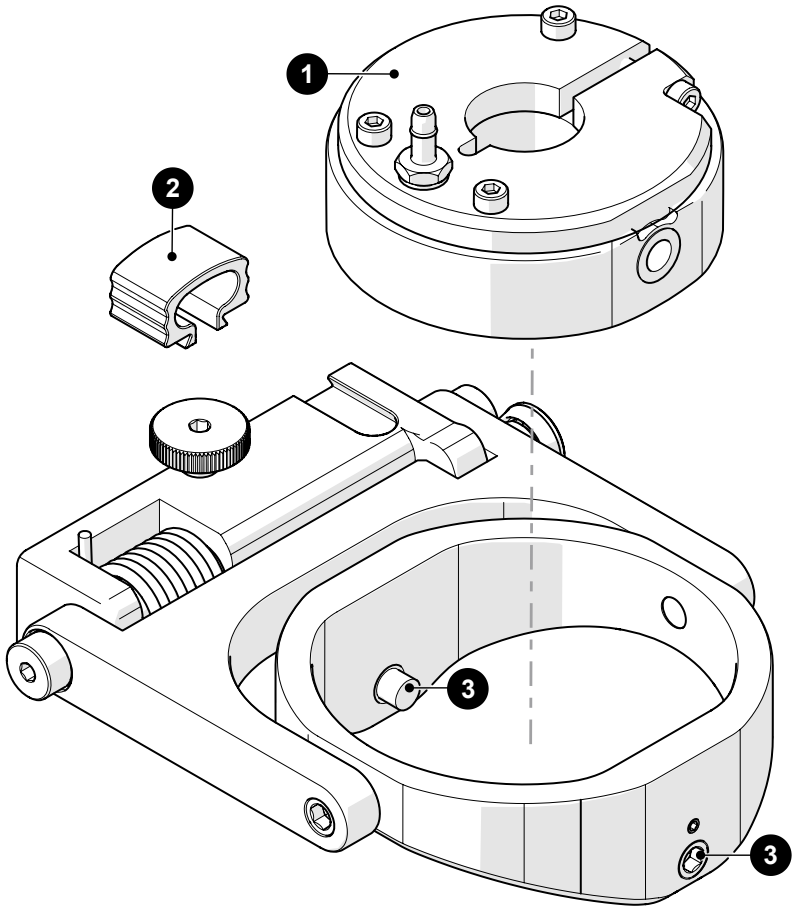

BOM ID	Part #	Description
1	PHS079-C	HT Corrosion Thickness Probe Holder - Flat Wear Plate - 19 mm (0.75 in) Diameter Receptacle
2	BG0091	Cable Clip
3	MA264	SHSS, M8 x 1.25 x 12 mm, dog point, SST

Fig. 258 - High temperature corrosion thickness probe holder parts

10.11. Probe Holder Components

10.11.1. Arm Style

	Arm Style	Part #			Arm Style	Part #	
A	Standard, Flat	PH0090		**B**	Short, Flat	PH0089	
C	Long, Flat	PH0099		**D**	Standard, Drop	PH0093	
E	Short, Drop	PH0092		**F**	Long, Drop	PH0094	
G	Standard, Extra-Drop	PH0096	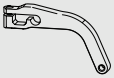	**H**	Short, Extra-Drop	PH0095	
I	Extra-Short, Flat	PH0159		**J**	Extra-Short, Drop	PH0161	

Fig. 259 - Probe holder arm selection

10.11.2. Yoke Style

	Yoke Style	Part #	Length			Yoke Style	Part #	Length	
S	Standard	PHS052	6.3 cm *(2.47 in)*		**W**	Wide	PHS063	7.9 cm *(3.06 in)*	

Fig. 260 - Probe holder yoke selection

10.11.3. Swing Arm Style

Swing Arm Style	Part #	Length		Swing Arm Style	Part #	Length	
Short	PH0069	4.1 cm *(1.61 in)*		Long	PH0100	4.6 cm *(1.81 in)*	

Fig. 261 - Swing arm selection

10.11.4. Heavy Duty Yoke Style

	Yoke Style	Part #	Length			Yoke Style	Part #	Length	
S	Standard	PHS048	8.3 cm *(3.26 in)*		**W**	Wide	PHS047	12.2 cm *(4.79 in)*	

Fig. 262 - Heavy duty probe holder yoke selection

10.11.5. Pivot Button Style

	Pivot Hole Size	Wedge Type			Pivot Hole Size	Wedge Type	
01	8.0 mm *(0.315 in)*	Olympus PA		**02**	5.0 mm *(0.197 in)*	Olympus TOFD	
03	2.7 mm *(0.106 in)*	Sonatest DAAH PA		**04**	9.5 mm *(0.375 in)*	-	
06	3.0 mm *(0.118 in)*	-		**07**	2.3 mm *(0.09 in)*	-	
08	Conical Head	-		**09**	5 mm *(0.197 in)* Internal	Zetec PA/TOFD	
11	3 mm *(0.118 in)* Internal	-		**14**	4 mm *(0.157 in)*	-	

Fig. 263 - Pivot button selection

NOTE: Additional probe holder pivot button types available.
(see "Jireh Industries Ltd." on page 1)

10.12. Variable Components

10.12.1. Frame Bar

Part #	Length
BG0038-05	5 cm *(1.97 in)*
BG0038-15	15 cm *(5.91 in)*
BG0038-25	25 cm *(9.84 in)*
BG0038-35	35 cm *(13.78 in)*
BG0038-45	45 cm *(17.72 in)*
BG0038-55	55 cm *(21.65 in)*

Part #	Length
BG0038-10	10 cm *(3.94 in)*
BG0038-20	20 cm *(7.87 in)*
BG0038-30	30 cm *(11.81 in)*
BG0038-40	40 cm *(15.75 in)*
BG0038-50	50 cm *(19.69 in)*

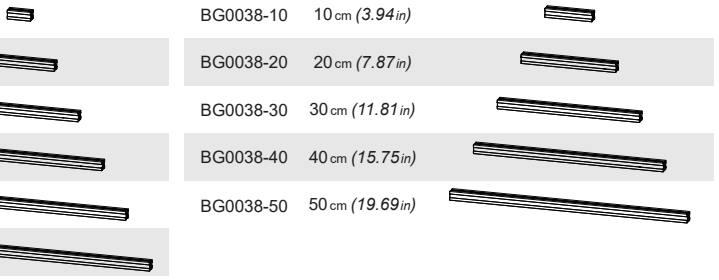

Fig. 264 - Frame bar selection

10.12.2. HT Cable Management Sleeving

CX0537-04.5	4.5 m *(14.8 ft)*
CX0537-07	7 m *(23 ft)*
CX0537-29.5	29.5 m *(96.8 ft)*

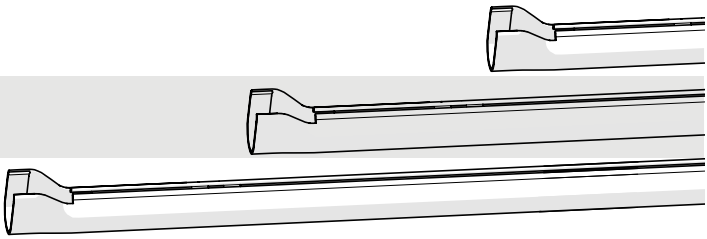

Fig. 265 - HT Cable management sleeving

10.13. Cases

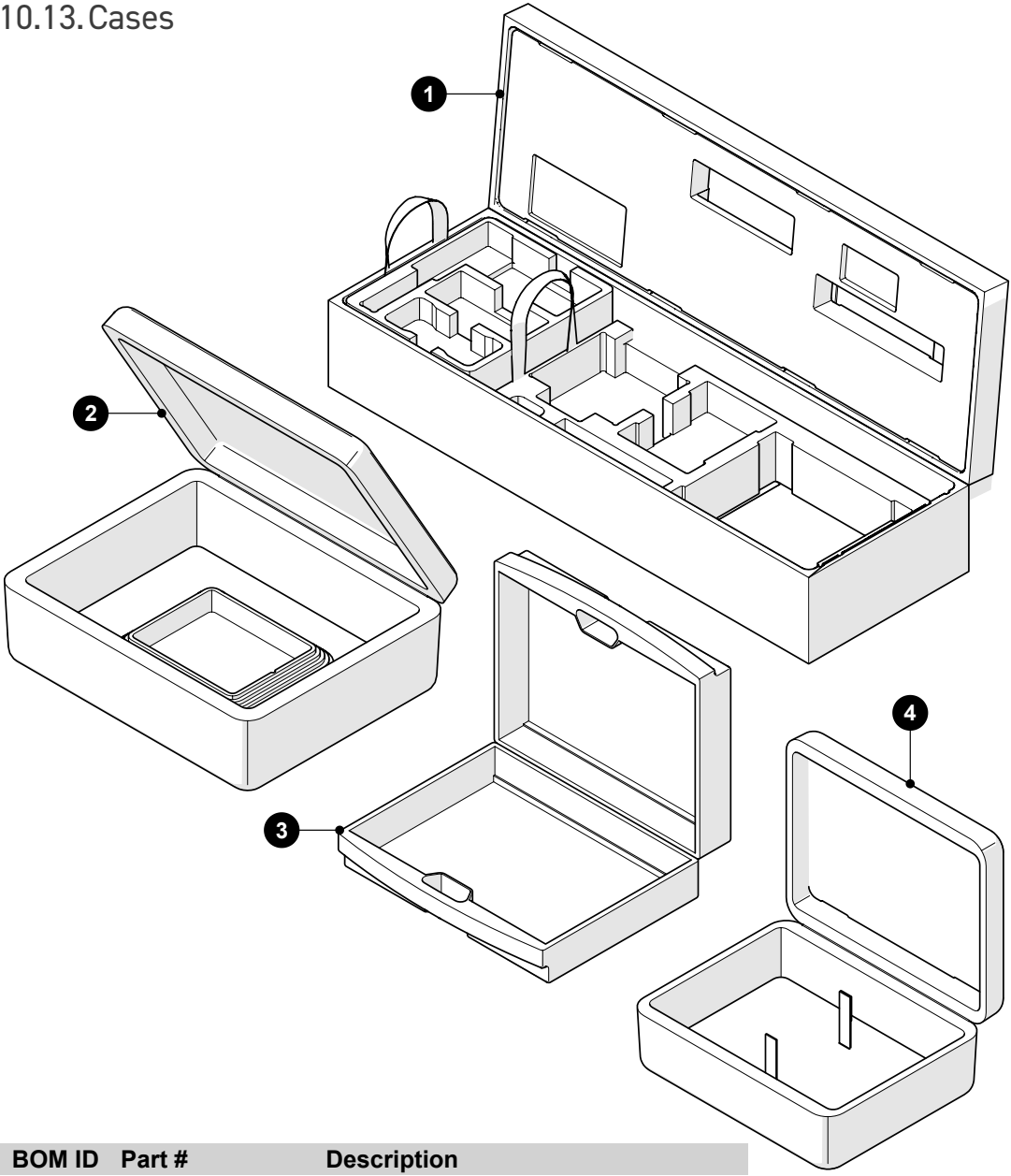

BOM ID	Part #	Description
1	DPA007	SKOOT HT Crawler Case
2	CMA016	Motorized Pump / Umbilical Case
3	EA421	Umbilical Case
4	CXA023	Umbilical / Probe Holder Frame Case

Fig. 266 - Cases

DISPOSAL

WEEE Directive

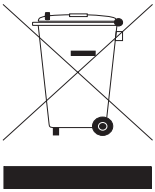

In accordance with European Directive on Waste Electrical and Electronic Equipment (WEEE), this symbol indicated that the product must not be disposed of as unsorted municipal waste, but should be collected separately. Refer to Jireh Industries for return and/or collection systems available in your country.

LIMITED WARRANTY

WARRANTY COVERAGE

Jireh Industries warranty obligations are limited to the terms set forth below: Jireh Industries Ltd. (“Jireh”) warrants this hardware product against defects in materials and workmanship for a period of THREE (3) YEARS from the original date of purchase. If a defect exists, at its option Jireh will (1) repair the product at no charge, using new or refurbished replacement parts, (2) exchange the product with a product that is new or which has been manufactured from new or serviceable used parts and is at least functionally equivalent to the original product, or (3) refund the purchase price of the product. A replacement product/part assumes the remaining warranty of the original product or ninety (90) days from the date of replacement or repair, whichever provides longer coverage for you. When a product or part is exchanged, any replacement item becomes your property and the replaced item becomes Jireh’s property. When a refund is given, your product becomes Jireh’s property.

OBTAINING WARRANTY SERVICE

To utilize Jireh’s warranty service you must ship the product, at your expense, to and from Jireh Industries. Before you deliver your product for warranty service you must phone Jireh and obtain an RMA number. This number will be used to process and track your product. Jireh is not responsible for any damage incurred during transit.

EXCLUSIONS AND LIMITATIONS

This Limited Warranty applies only to hardware products manufactured by or for Jireh Industries. This warranty does not apply: (a) to damage caused by accident, abuse, misuse, misapplication, or non-Jireh products; (b) to damage caused by service (including upgrades and expansions) performed by anyone who is not a Jireh Authorized Service Provider; (c) to a product or a part that has been modified without the written permission of Jireh.

Jireh Industries Ltd.
53158 Range Road 224
Ardrossan, AB T8E 2K4
Canada

Phone: 780-922-4534

jireh.com

HydroFORM™ is a trademark of Olympus

All brands are trademarks or registered trademarks of their respective owners and third-party entities.

Changes or modifications to this unit or accessories not expressly approved by the party responsible for compliance could void the user's authority to operate the equipment.

All specifications are subject to change without notice.

© 2019 - 2022 Jireh Industries Ltd.

Jireh Industries Ltd.
53158 Range Road 224
Ardrossan, Alberta
Canada
T8E 2K4

780-922-4534

jireh.com