Spare Parts

RECON

DWG001-

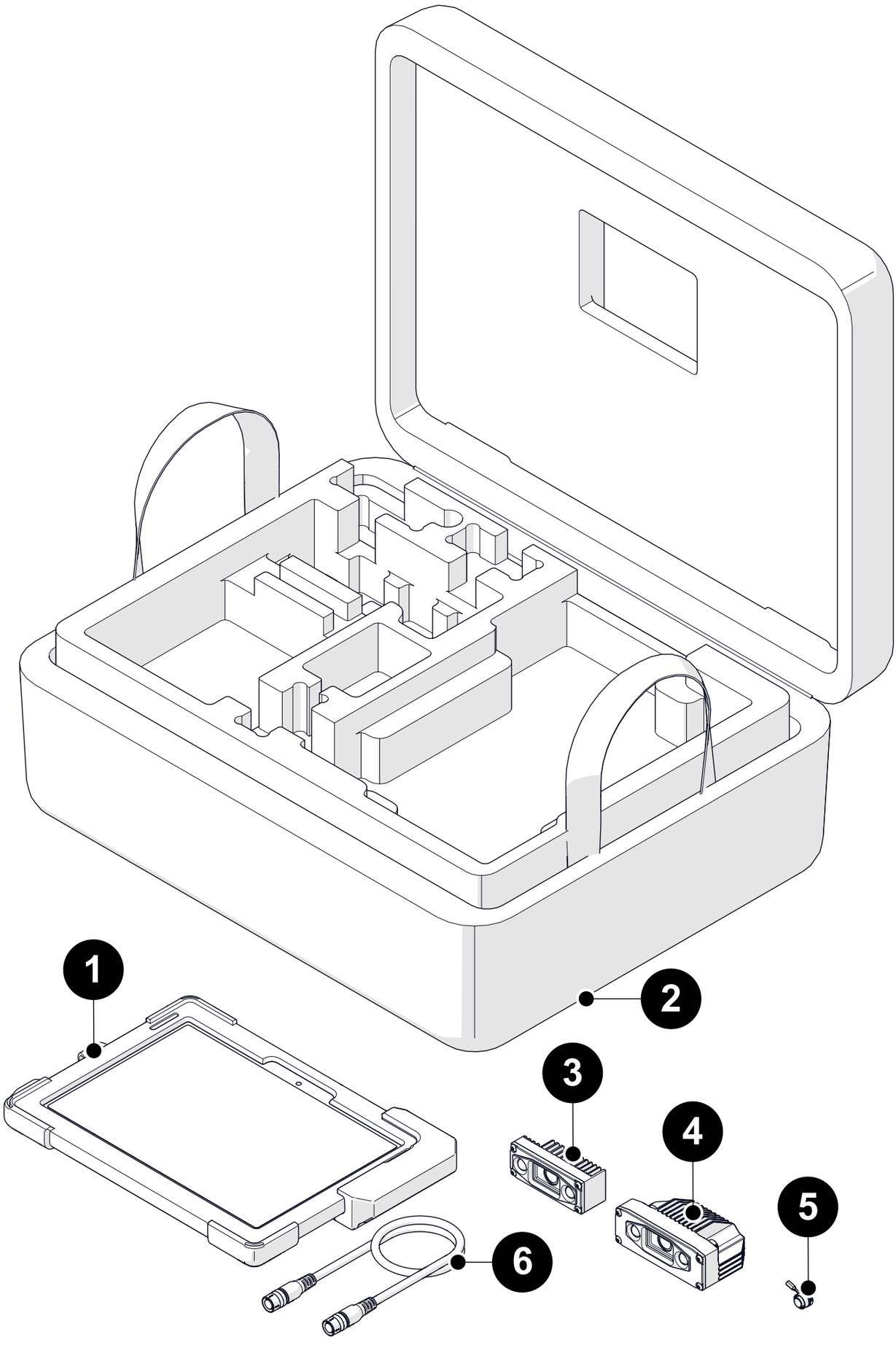

Edmonton Office: 780.922.4534
Houston Office: 832.564.0626
Rotterdam Office: +31 85 002 0801

Kuala Lumpur Office: +60 3 2712 7818
Email: info@jireh.com
Web: jireh.com

JIREH

Spare Parts

RECON

DWG001-

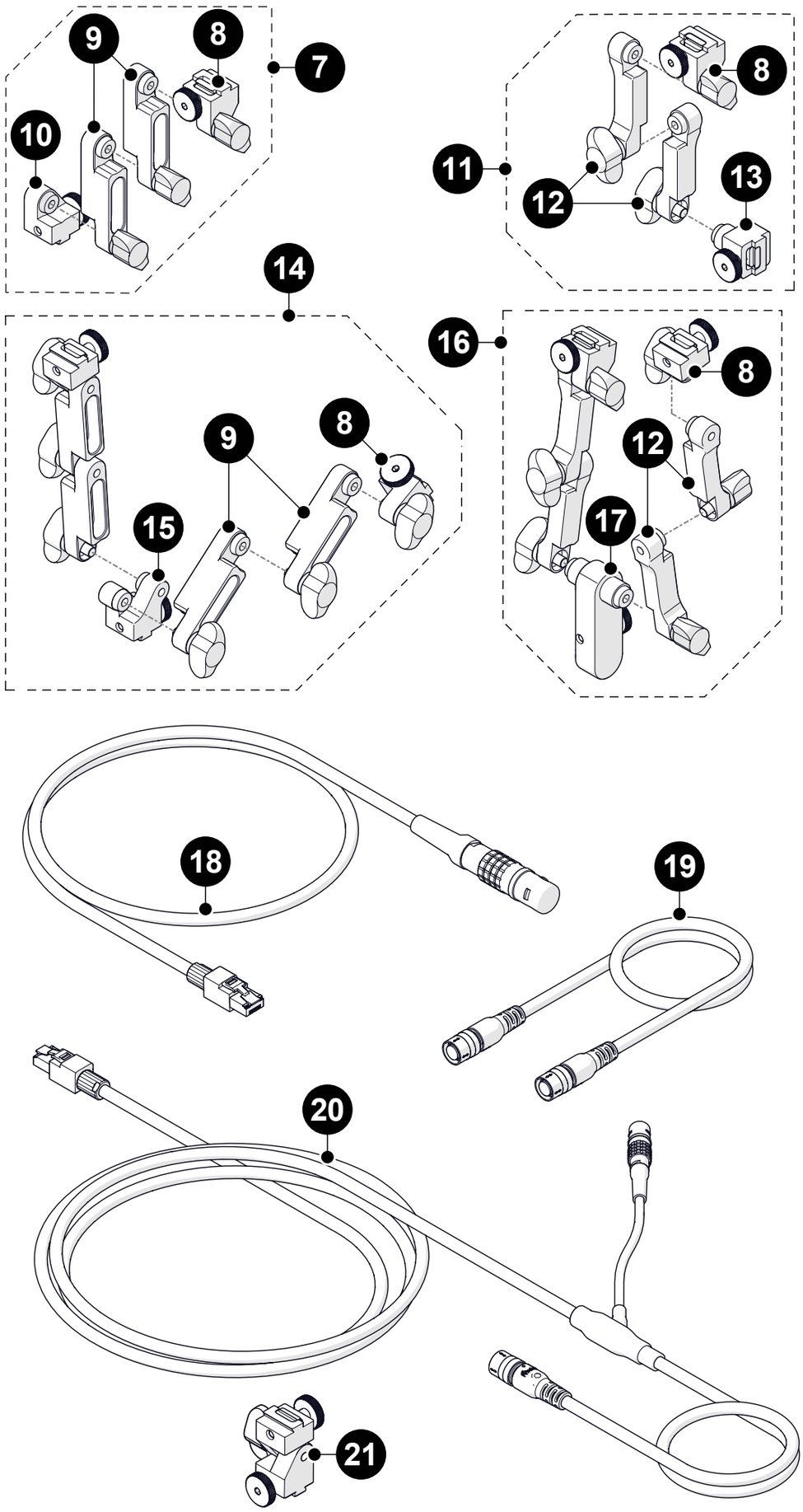

Edmonton Office: 780.922.4534
Houston Office: 832.564.0626
Rotterdam Office: +31 85 002 0801

Kuala Lumpur Office: +60 3 2712 7818
Email: info@jireh.com
Web: jireh.com

JIREH

Spare Parts

RECON

DWG001-

BOM ID	Part #	Description
1	DWA008	Tablet
2	DWA007	RECON case
3	DWA005	Satellite camera
4	DWA004	Camera
5	JP132	Camera socket plug
6	UMA047-X	*See Satellite Camera Cable*
7	DWS019	Horizontal camera mount
8	DWS015	Female taper dovetail mount
9	DWS013	Parallel taper extension bar
10	DWS018	Male taper dovetail mount
11	DWS025	Vertical camera mount
12	DWS021	Perpendicular taper extension bar
13	DWS024	Vertical dovetail camera mount
14	DWS014	Horizontal dual camera mount
15	DWS016	Horizontal dovetail dual taper mount
16	DWS023	Vertical dual camera mount
17	DWS016	Horizontal dovetail dual taper mount
18	UMA055-06	Network adapter cable
19	UMA046-X	*See Net Cable*
20	UMA050-X	*See Crawler Powered Net Cable*
21	DWS002	Short Camera Mount

Spare Parts

RECON

Satellite Camera Cable

Part #	Length	
UMA047-0.3	30 cm *(12 in)*	
UMA047-0.9	*90 cm (36 in)*	

Net Cable

Part #	Length	
UMA046-0.4	40 cm *(16 in)*	
UMA046-0.6	*60 cm (24 in)*	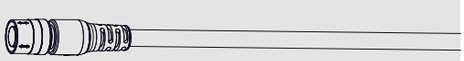
UMA046-0.9	*90 cm (36 in)*	

Crawler Powered Net Cable

Part #	Length	
UMA050-05	5 m *(16.4 ft)*	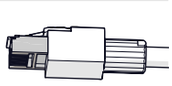
UMA050-07.5	7.5 m *(24.6 ft)*	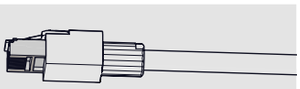
UMA050-15	15 m *(49.2 ft)*	
UMA050-20	20 m *(65.6 ft)*	
UMA050-30	30 m *(98.4 ft)*	

Edmonton Office: 780.922.4534
Houston Office: 832.564.0626
Rotterdam Office: +31 85 002 0801
Kuala Lumpur Office: +60 3 2712 7818
Email: info@jireh.com
Web: jireh.com

JIREH